Fiber Optic Links for RF and Microwave Systems

IEEE COMMUNICATIONS SOCIETY

IEEE photonics SOCIETY

Howard Hausman

President /CEO

MITEQ, Inc.

Hauppauge, NY 11788

hhausman@miteq.com

Fiber Optic Links for RF and Microwave Systems

- ☐ Introduction / Objective
- ☐ Light as a Carrier of Information - Modulating Light
- ☐ Key Elements in Fiber Optic Links
- ☐ Characteristics of Key Elements in a Fiber Optic Links
- ☐ Analysis of a Fiber Optic Link
- ☐ Summary
- ☐ RF and Microwave Applications using Fiber Optic Links
- ☐ Data of a 1GHz to 18GHz Fiber Optic Link
- ☐ Conclusion

Introduction / Objective

- Characterize elements of a fiber optic link as a microwave component
- Characterize the whole fiber optic link in terms of Gain, NF, & Intermodulation Interference
- Insert the link in a microwave chain
- Analyze it as any other microwave component

- Add Fiber Optic Links to the Microwave Engineer's tool bag -

Nature of Light (Wave, Particle, or Both?)

Beam of light:
Particles (photons) which exhibit **wavelike properties**.

Wave-Particle Duality

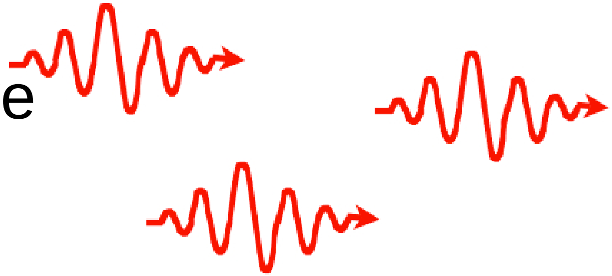

Particle Behavior: (Photon)

Energy proportional to frequency (Wave Length)

- Explains
  - Photodetectors
  - Laser diodes

Wave Behavior: An electromagnetic wave

Oscillating electric and magnetic wave Fields at right angles

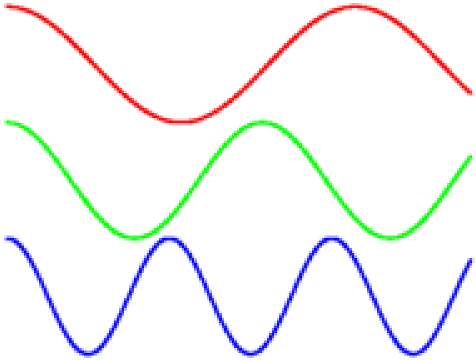

- Explains
  - Optical fiber transmission
  - Modal properties -

Chain Analysis

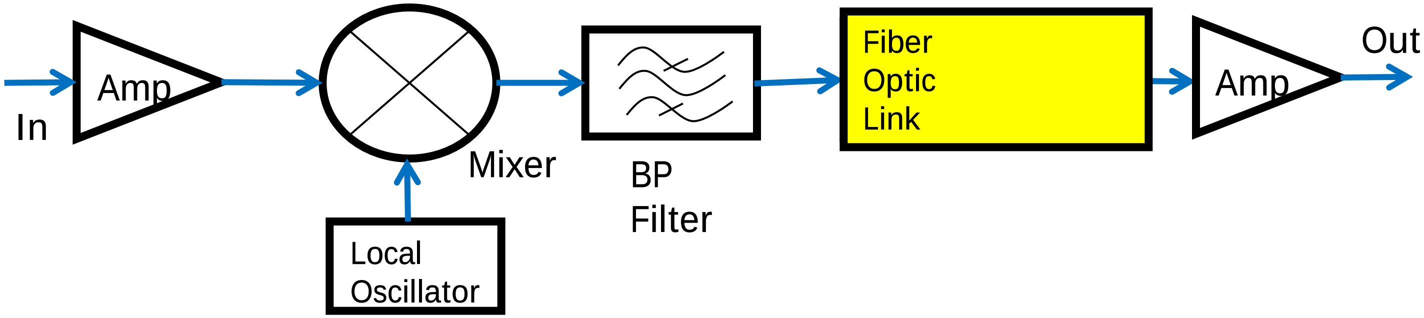

Device Characteristics

DESCRIPTION	GAIN dB	dB NOISE FIGURE dB	Total IN-3rd dBm OUT	Carrier Power dBm	Total GAIN dB	Total NF dB	OIP3 3rd dBm	IIP3 3rd dBm	Intermod 2 Carriers dBc
Spec					45	10	40		-30
				25.5	45.5	9.5	41.3	-4.177	-31.6
INPUT			100		0.0	0.00	100.0	100.0	-240.0
LEVEL				-20.0					
Amplifier	15	6.5	40	-5.0	15.0	6.50	40.0	25.0	-90.0
Mixer	-9	9	23	-14.0	6.0	6.71	22.4	16.4	-72.7
Filter	-0.5	0.5	100	-14.5	5.5	6.74	21.9	16.4	-72.7
Amplifier	20	12	22	5.5	25.5	9.49	22.0	-3.5	-32.9
Output					45.5	9.50	41.3	-4.2	-31.6
Amplifier	20	5	50	25.5					

- Characterize the fiber optic link as a microwave component
- Define Gain, Noise figure, Linearity of a fiber optic link *

Light as a Carrier of Information - Modulating Light

Digital Modulation of Light

- Most optical links are digital
- Light is ON or OFF (Pulse Amplitude Modulation, PAM)
  - OFF: No light (or minimum light)
    - Level is in the noise
  - ON: Fixed level above the noise
    - Generally in a saturated mode / Maximum light
  - ON/OFF Level; Called the extinction ratio
    - Best case Signal to Noise Ratio (S/N)

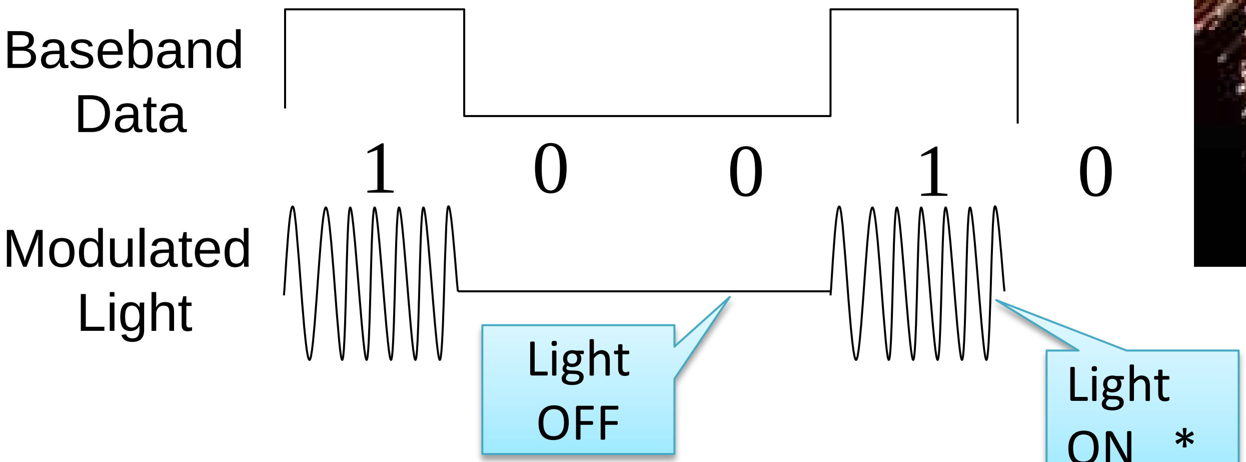

Baseband Data

1 0 0 1 0

Modulated Light

Light OFF

Light ON *

Analog (RF/Microwave) Modulation of Light

- RF/Microwave signal Amplitude Modulates (AM) an Electromagnet wave in the Optical region of the spectrum, a Light Carrier

RF/Microwave Signal

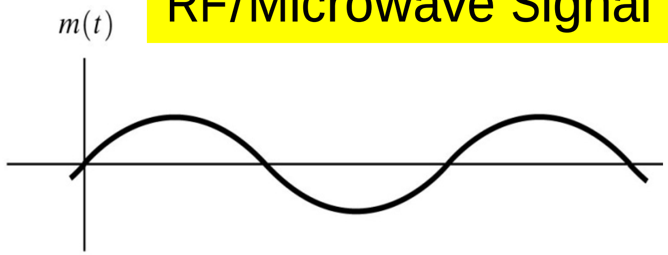

Modulated Light

Ac (1+m(t))

Am

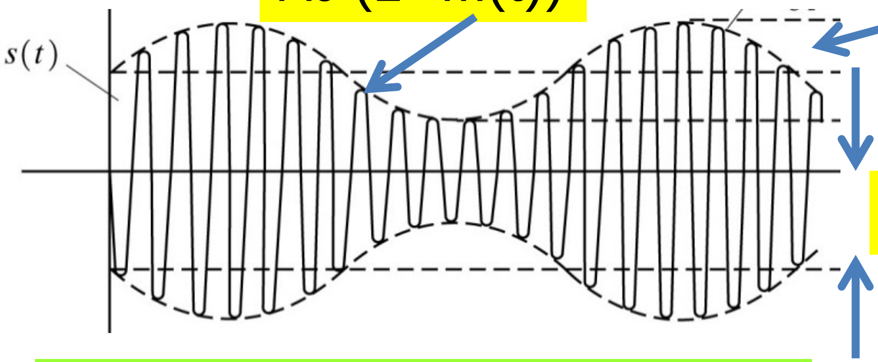

Ac

- **Analog and microwave signals have a unique set of problems**
- **Dynamic range is limited by**
  - **Linearity (Intermodulation Distortion)**
  - **Additive noise (NF)**

$m(t) = Am \sin(\omega_m t)$

modulation index = $m = Am/Ac$

Peak Voltage = $Ac + Am$

Power in modulation signal with respect to the Carrier power

P_{Am} / P_{Ac} ➔ 20 Log (m) -

Key Elements in Fiber Optic Links

Basic Optic Link

- Light Source
    - Capable of being Amplitude Modulated
- Fiber optic cable
- Optical receiver

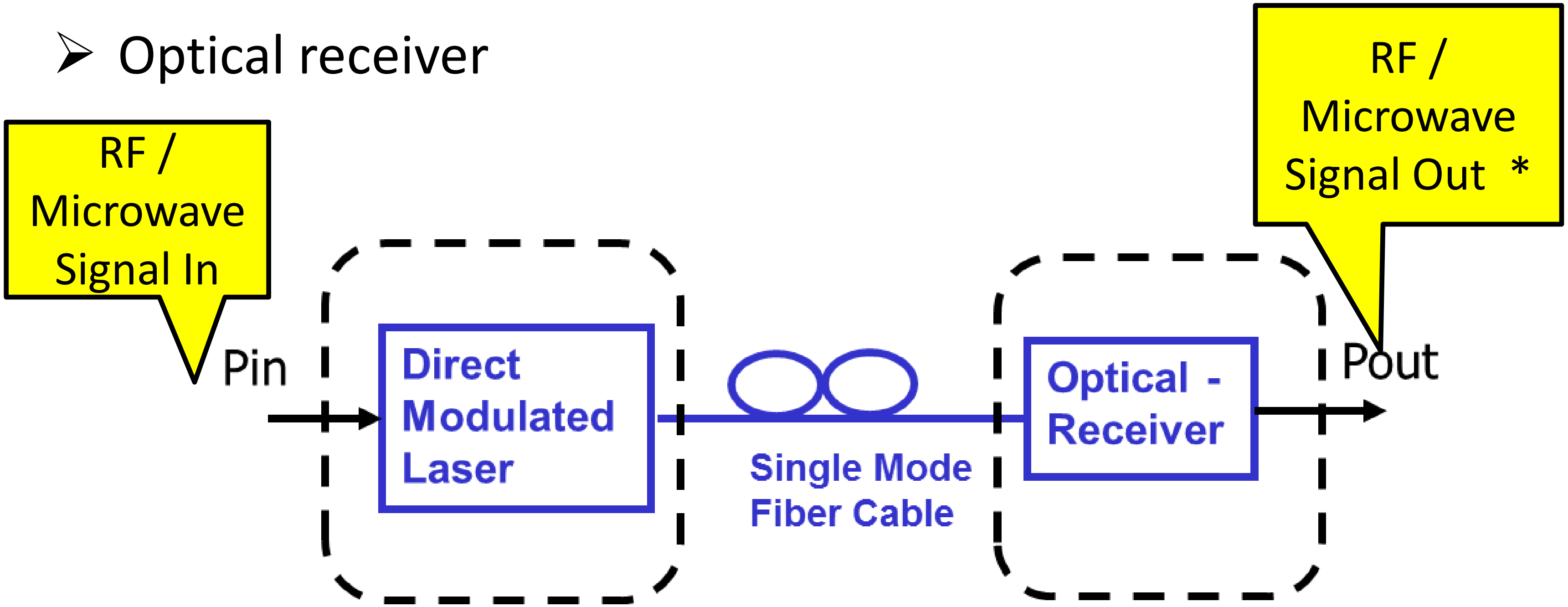

RF / Microwave Signal In

Pin

Direct Modulated Laser

Single Mode Fiber Cable

Optical - Receiver

Pout

RF / Microwave Signal Out *

Creating Light
Photon Emissions

- Ev = Valance Band Energy
- Ec = Conduction Band Energy
- Ec – Ev = Eg, Energy Gap
- Current raises electrons to the conduction band (Ec)
- Electron drops from a higher (Ec) state to a lower state (Ev)
  - Photon is emitted with energy Eg
- Photon emission is Random / Spontaneous
- Photons are uncorrelated and independent -

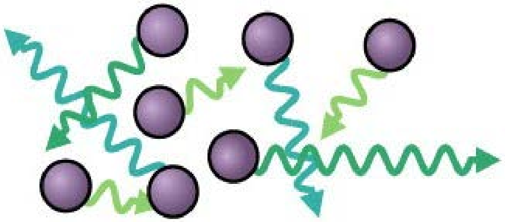

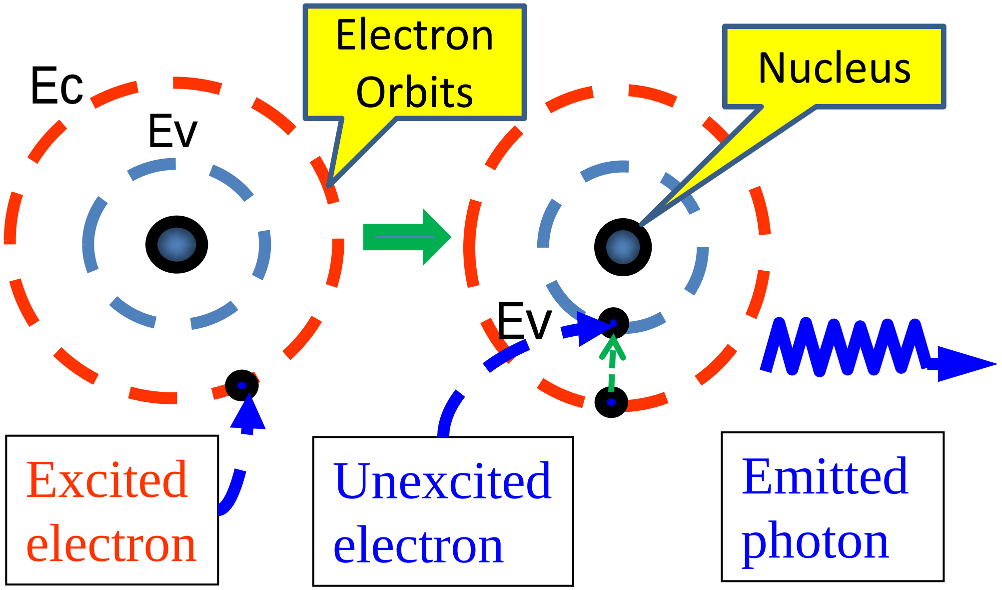

Electron Orbits

Nucleus

Excited electron

Unexcited electron

Emitted photon

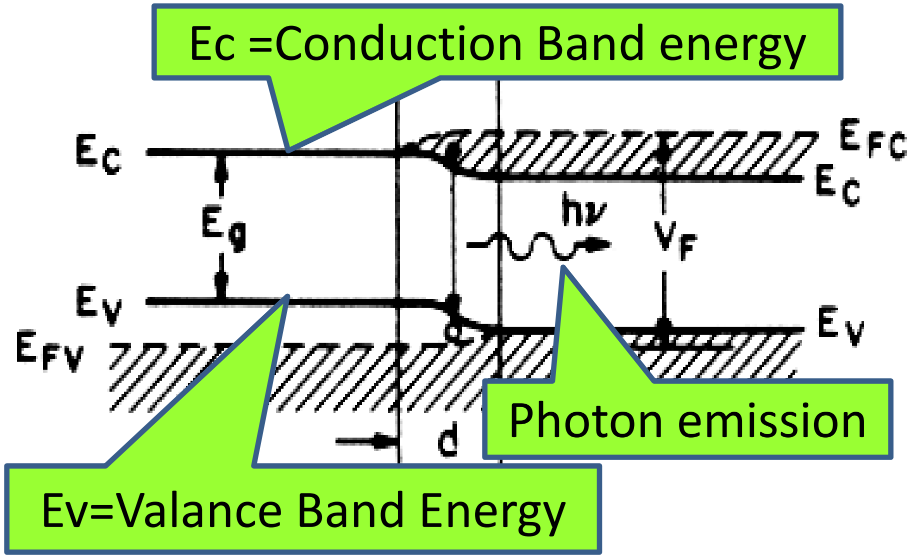

Ec =Conduction Band energy

Photon emission

Ev=Valance Band Energy

Photon Frequency as Function of Energy Gap (Eg)

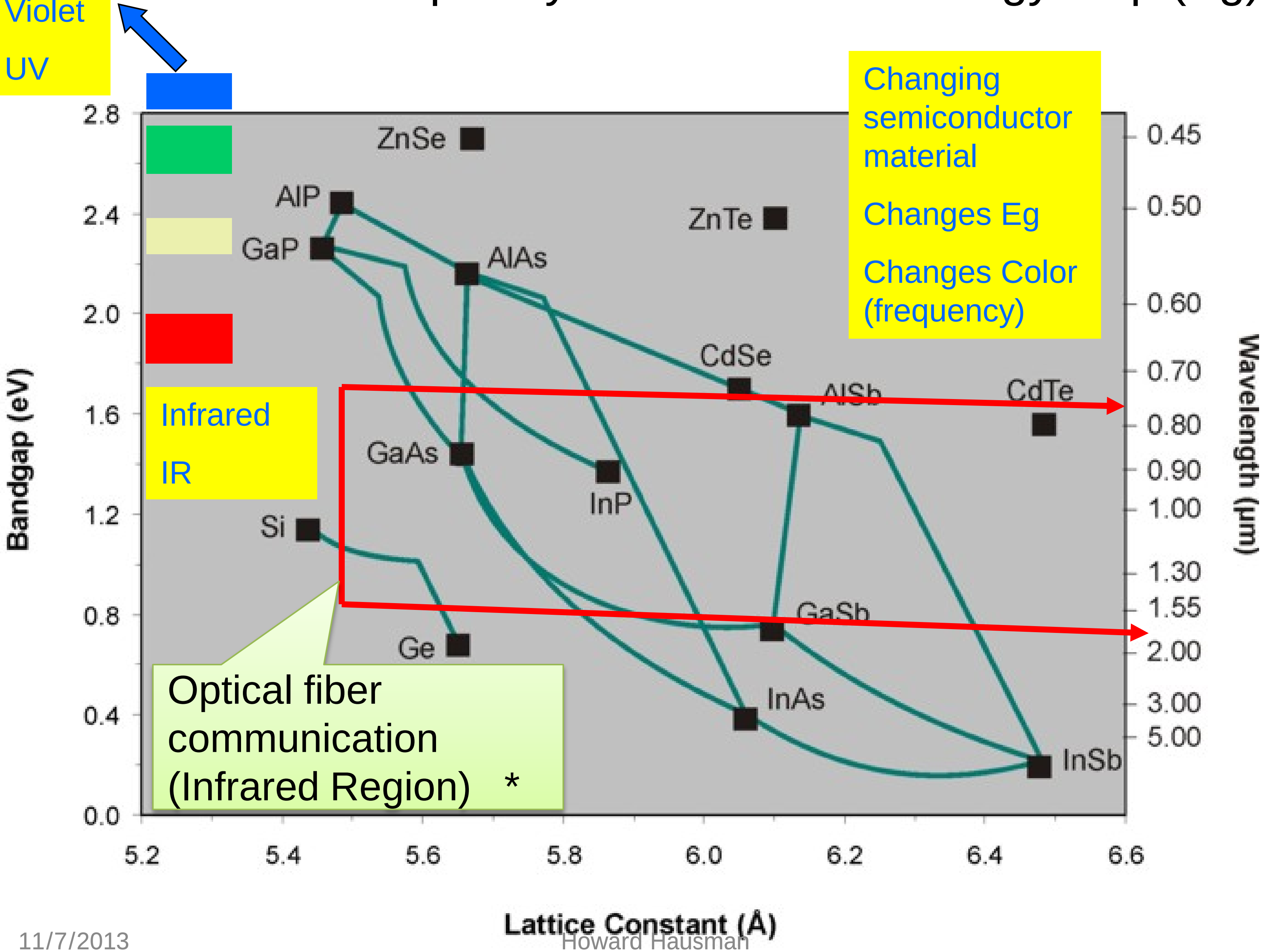

Ultra-
Violet

UV

Changing semiconductor material

Changes Eg

Changes Color (frequency)

Infrared

IR

Optical fiber communication (Infrared Region) *

Light Emitting Diode (LED)

- LED is a junction diode that is operated with forward bias
- Photons are generated & focused out of the junction
- Passes through an opening or lens
- Color (frequency) is a function of Eg

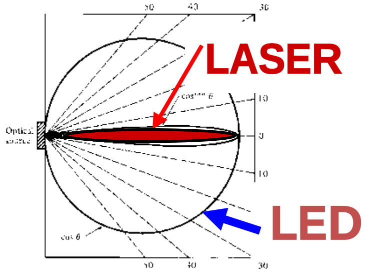

- ☐ LEDs produce incoherent light
- ☐ Spontaneous emissions of photons*

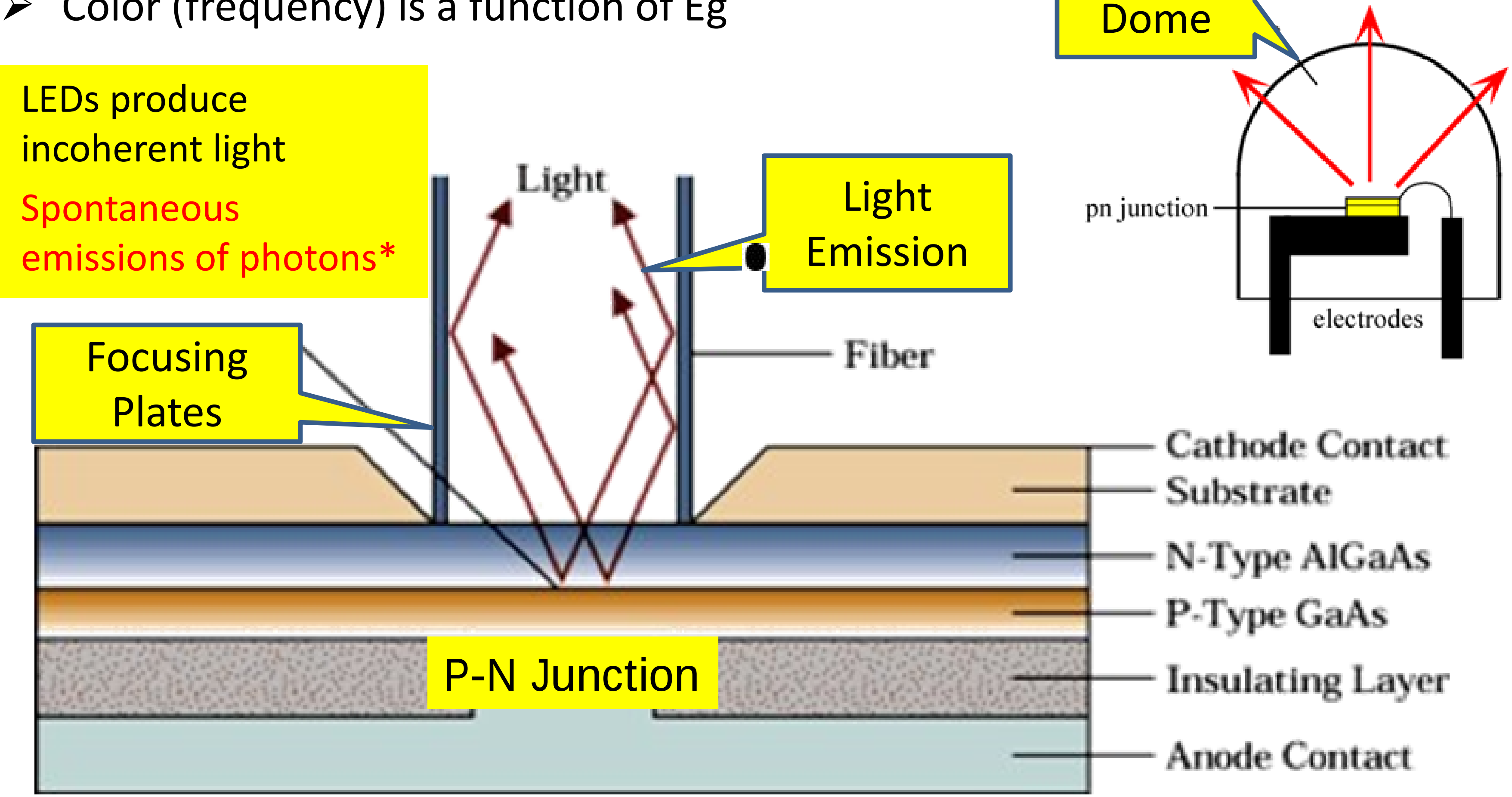

LASER

"Light Amplification by Stimulated Emission of Radiation"

- LASER is an Optical Oscillator
- Operates in the Light Spectrum
- Oscillation requires:
- 1- An amplifier with gain
- 2- A feedback system
- 3- A resonant circuit
- 4- An output coupler

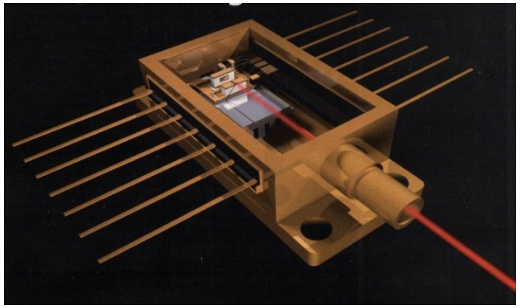

Light Spectrum

Typically specified by its wavelength (nanometers)

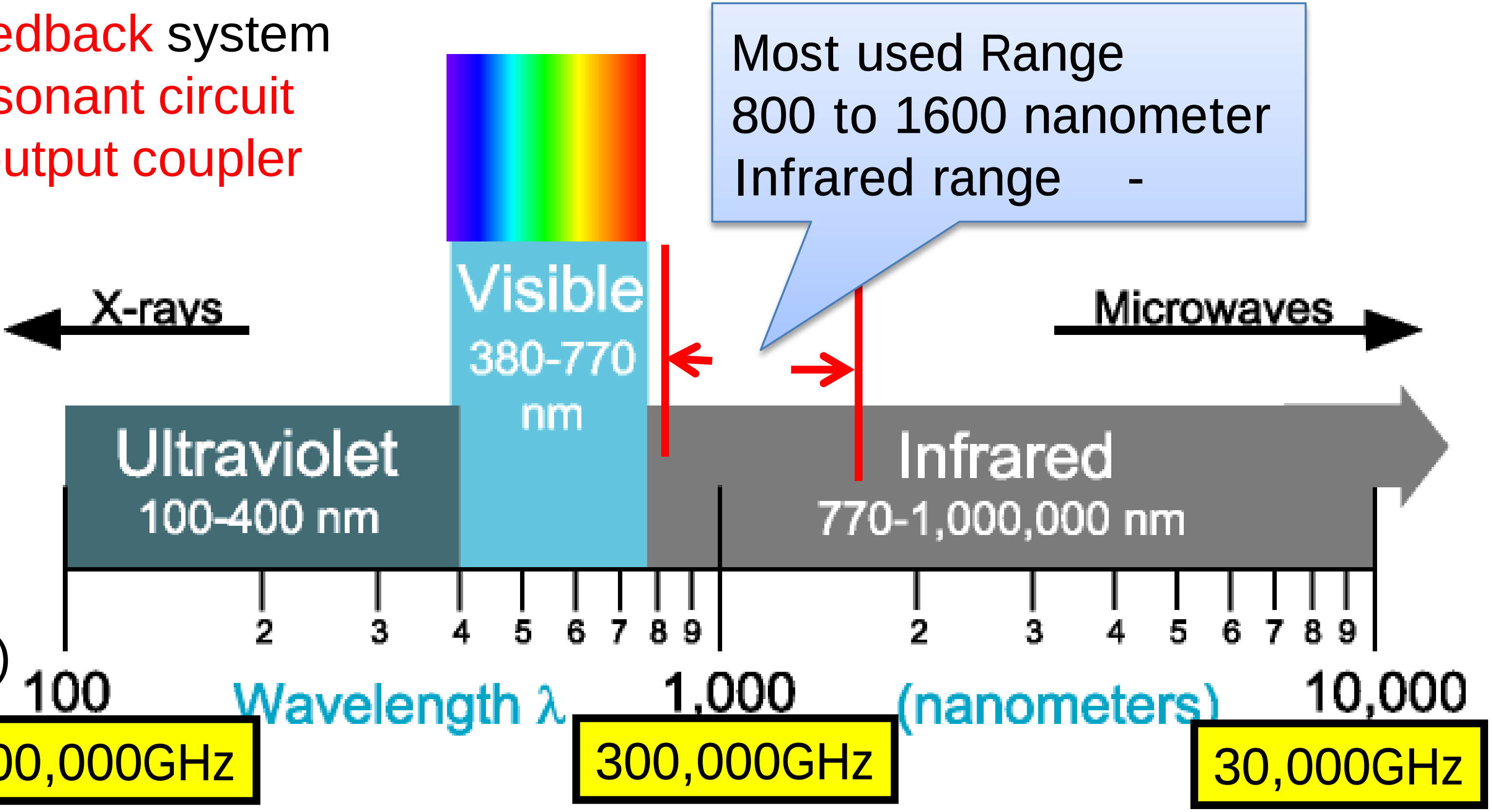

Most used Range
800 to 1600 nanometer
Infrared range -

Creating Coherent Light

“Light Amplification by **Stimulated Emission** of Radiation”

- **Photon strikes an electron** in the higher energy band
- Electron drops to the lower energy band
- Emits another photon, **stimulated emission**

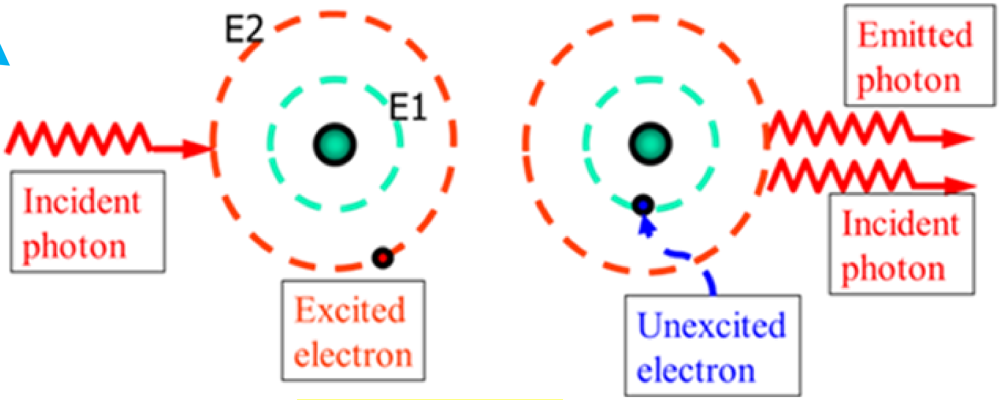

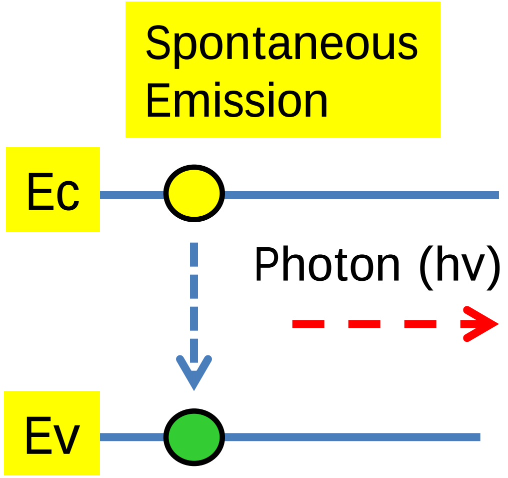

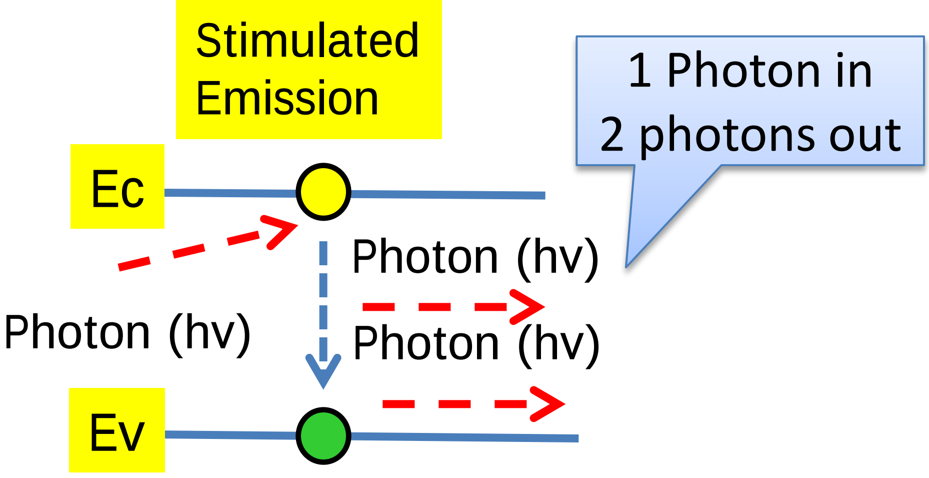

1 Photon in
2 photons out

Photon momentum = h v
h= Plank’s constant / v = wave frequency -

Characteristics of Stimulated Emissions

- One Photon creates two photons
- Both photons will have
  - Identical energy
  - Identical wavelength
  - Narrow line width
  - Identical direction
  - Spatial coherence
  - Narrow beam width
  - Identical phase
  - Temporal coherence
  - Identical polarization

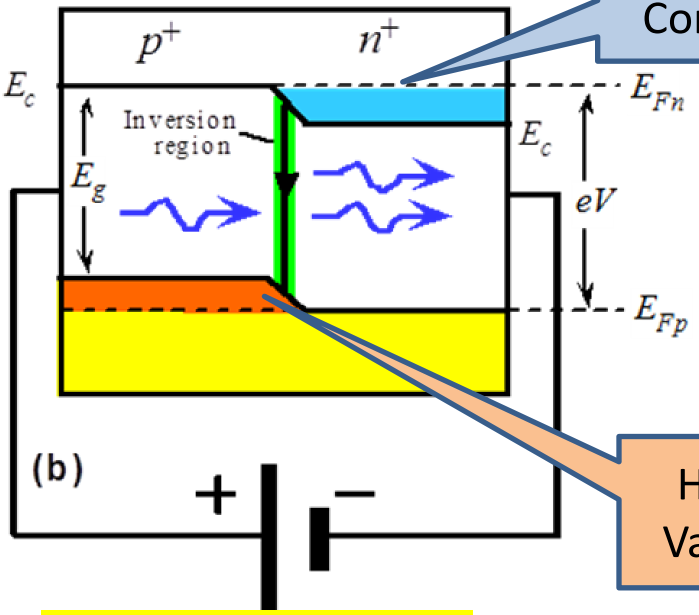

Electrons in the Conduction band

Holes in the Valance band

Stimulation occurs in a forward biased P-N junction

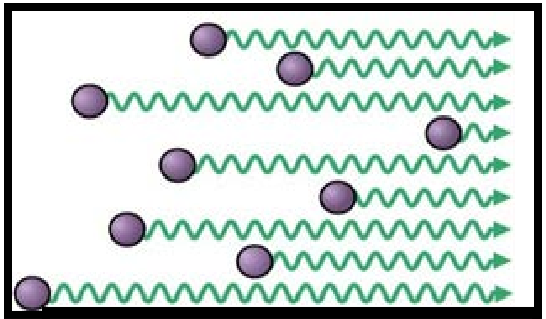

Coherent Photons*

Laser Fundamentals – Gain

Inverted population of carriers

$$n = 2\left(\frac{m_e kT}{2\pi h^2}\right)^{3/2} e^{\frac{(E_{fn}-E_c)}{kT}}$$

$$p = 2\left(\frac{m_h kT}{2\pi h^2}\right)^{3/2} e^{\frac{(E_v-E_{fp})}{kT}}$$

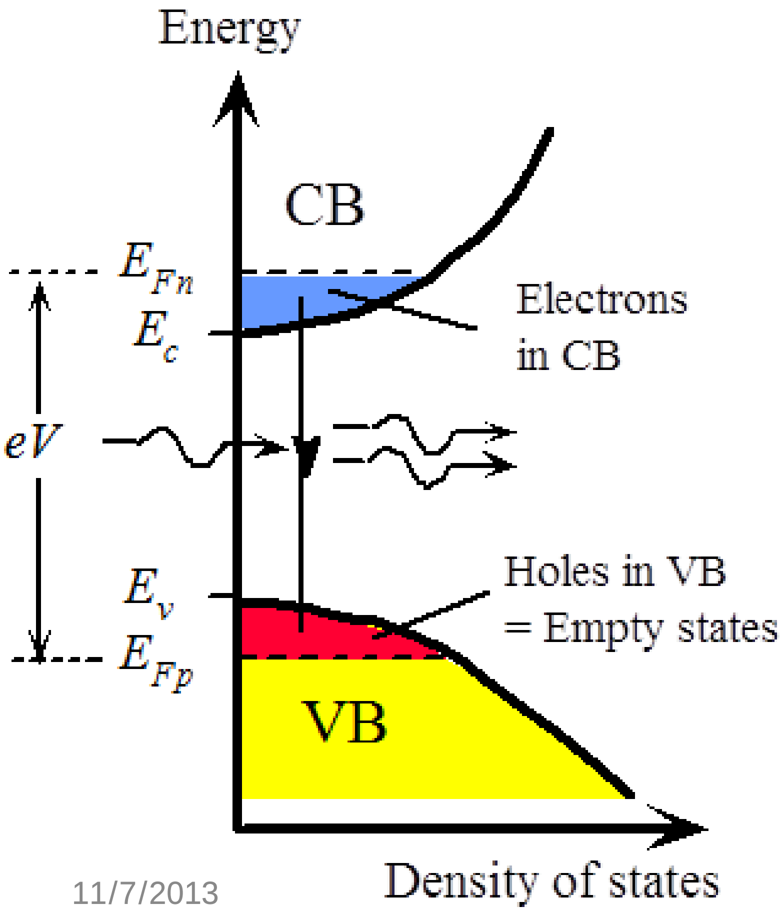

- Semiconductor is doped with impurities to produce a large amount of excess carriers
- n & p are the number of electron & hole carriers
- E_{Fn} & E_{Fp} are Fermi-Dirac distribution levels
  - Fermi levels are the mean energy level of Electron (E_{Fn}) & Holes (E_{Fp})
  - Electron concentrations are above the conduction band
  - Hole concentrations are below the valance band
- Average energy released

  $(E_{Fn} - E_{Fp}) = eV > Eg$
- More photons are released than are lost
- The process has Gain -

PN Junction Structure

- P-N junction is forward biased
- Electrons randomly go from the conduction band to the valance band
  - Photon is released
- Excess photons are channeled in a thin layer between the N & P regions (100 to 200 nm)

Confinement Region

- Active layer is surrounded by lower index of refraction material AlGaAs
  - Behaves like a dielectric waveguide
- Ensures that photons are confined to the active or optical gain region
- Increases rate of stimulated emission

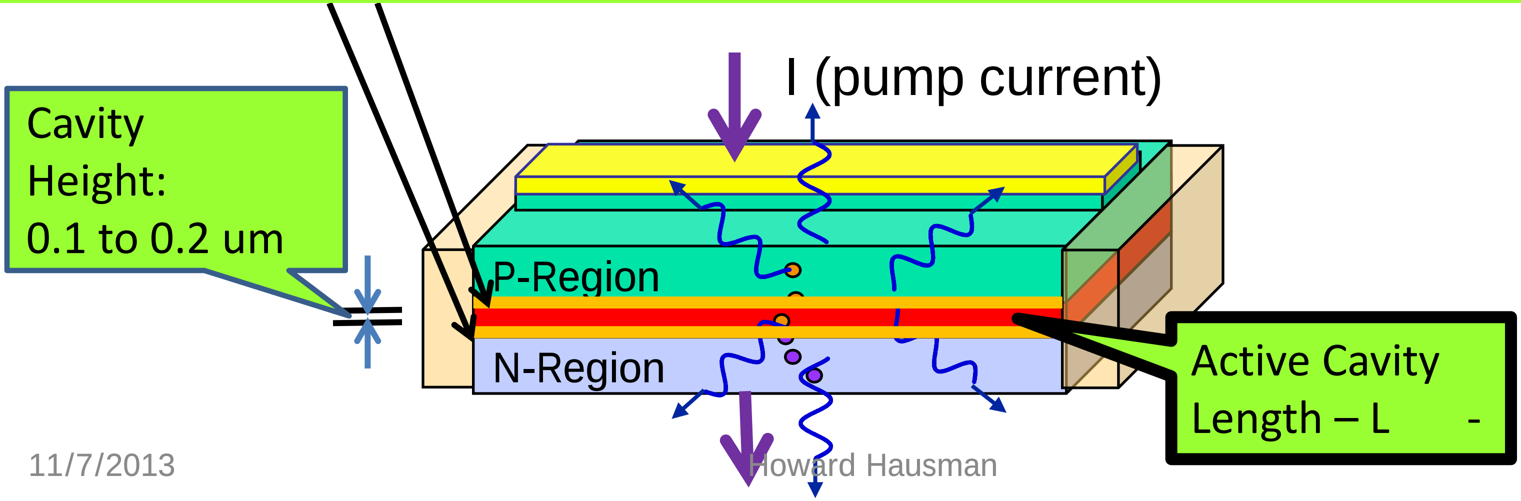

Cavity
Height:
0.1 to 0.2 um

Active Cavity
Length – L -

Creating an Optical Oscillator

- Pair of mirrors reflects the light (photons)
  - Builds up intensity (Feedback)
- Sustained chain reaction occurs from Stimulated Emissions
  - Photons are in phase & Gain >1
  - Barkhausen Criteria for an oscillation
- Emitted photons are coherent
- Light Amplification occurs
  - Wave length is a function of cavity length “L”
- One end of the cavity
  - Semitransparent reflector
  - Allows the light out (output coupler)

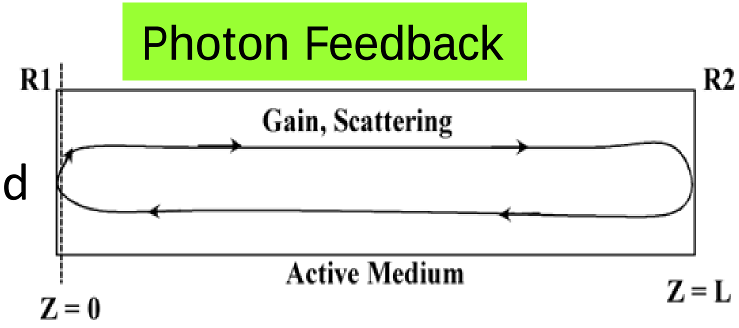

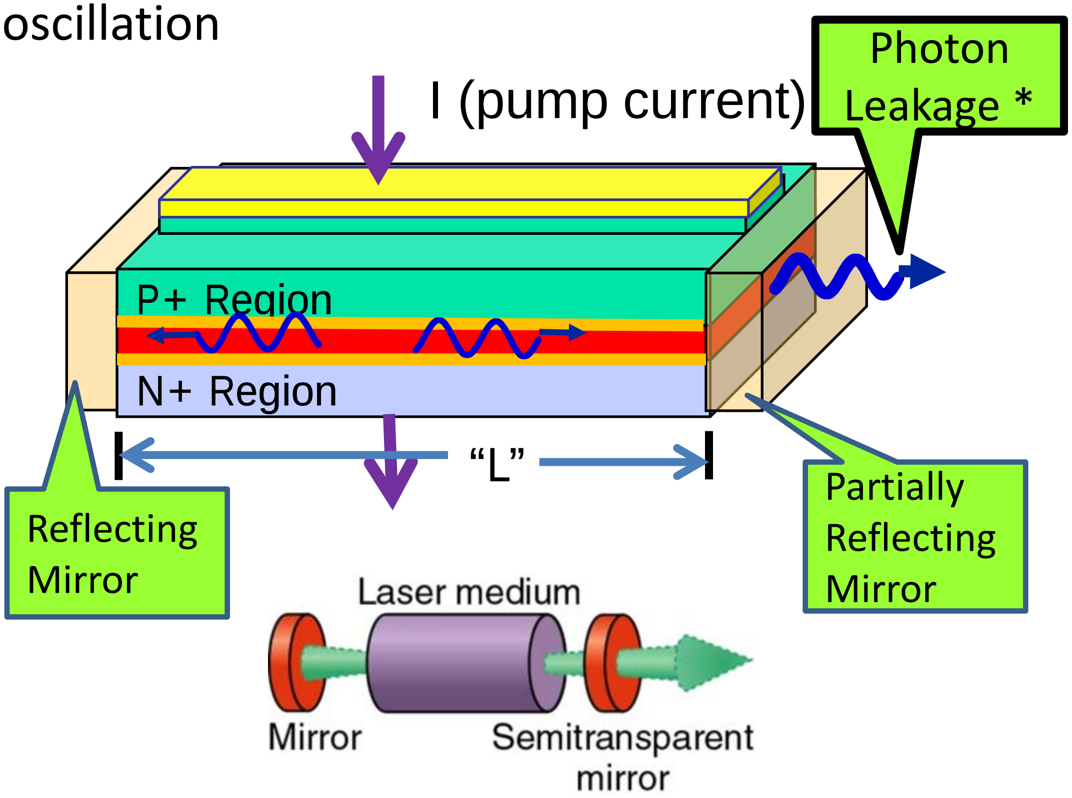

Fabry-Perot Laser

- Only multiples of the half wavelength can exist in the cavity, resonant circuit
- Ln is the cavity length, m is the mode $\lambda = \frac{2Ln}{m}$
- Reflected Photons provide gain when they strike a charge

Fabry-Perot output spectrum
Spectral width ≈ 4nm -

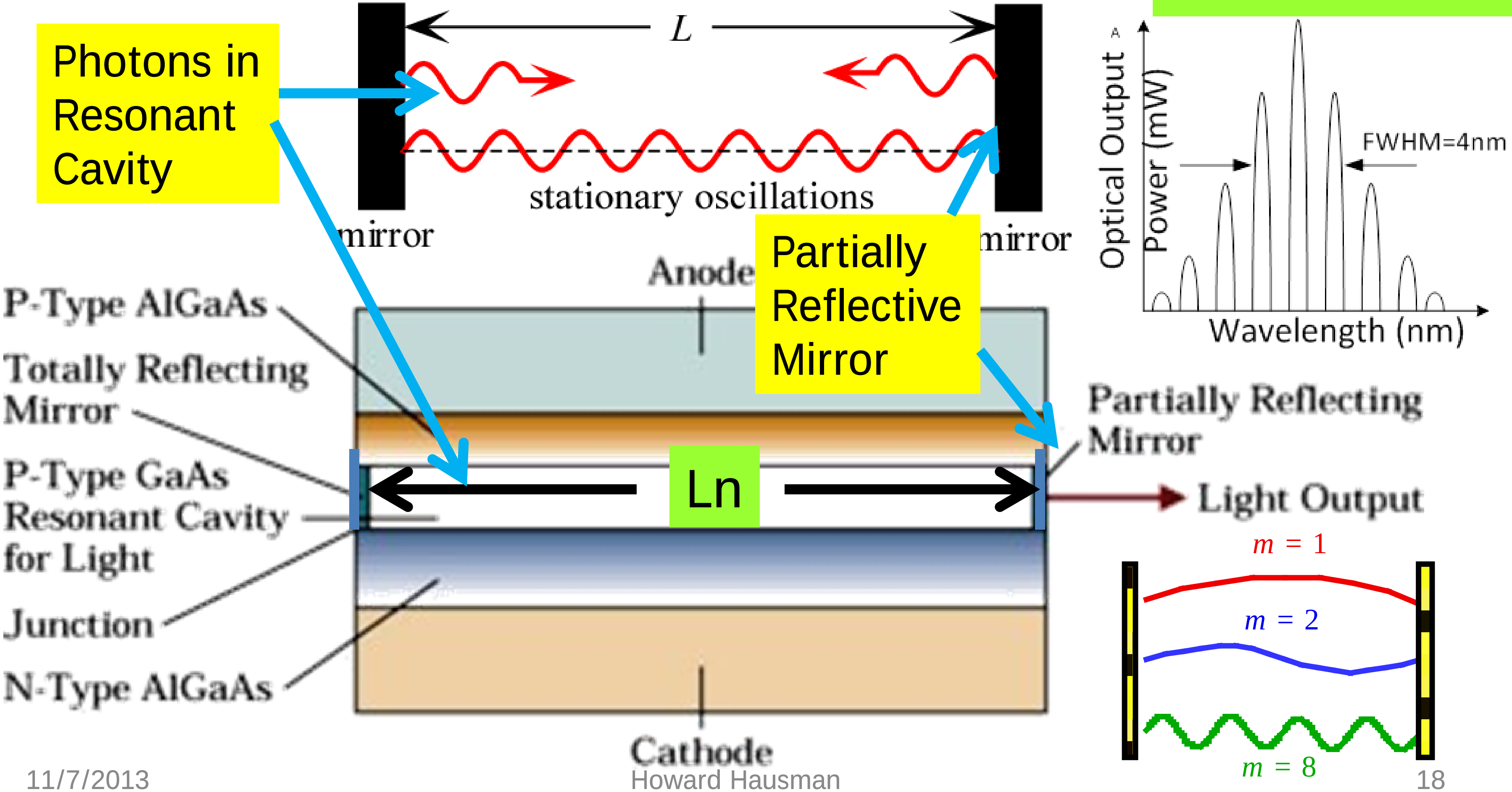

Photons in Resonant Cavity

Partially Reflective Mirror

Distributed Feedback (DFB) Laser

- Higher "Q" tuned cavity limits output to single frequency ➔ wavelength
- A Bragg cell grating is incorporated in the vicinity of an active region
- Bragg grating works like a mirror, selectively reflecting only one wavelength
- Grating is distributed over entire active region & replaces end face mirrors
- Spectral width = 0.1nm (Q≈ 15,000) vs 4nm ((Q≈ 400) for a Fabry-Perot Laser
  - Minimizing the effects of chromatic dispersion
- DBF Laser can be directly modulated to frequencies as high as 20 GHz
  - Fo ≈ 300,000 GHz ➔ BW ≈ 20 GHz (very rough numbers)

☐ For optical wavelength λ = 1550 nm
☐ Grating spacing Lambda Λ = 235 nm
☐ n is the refractive index of the medium *

$$\Lambda = \frac{\lambda}{2n}$$

Spectrum width 0.1nm

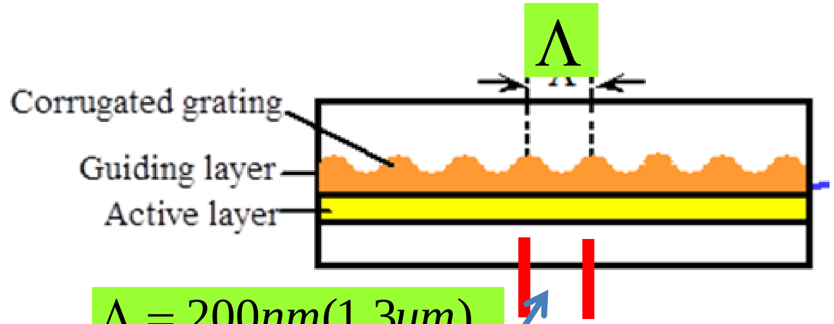

$$\Lambda = 200nm(1.3um)$$
$$\Lambda = 235nm(1.55um)$$

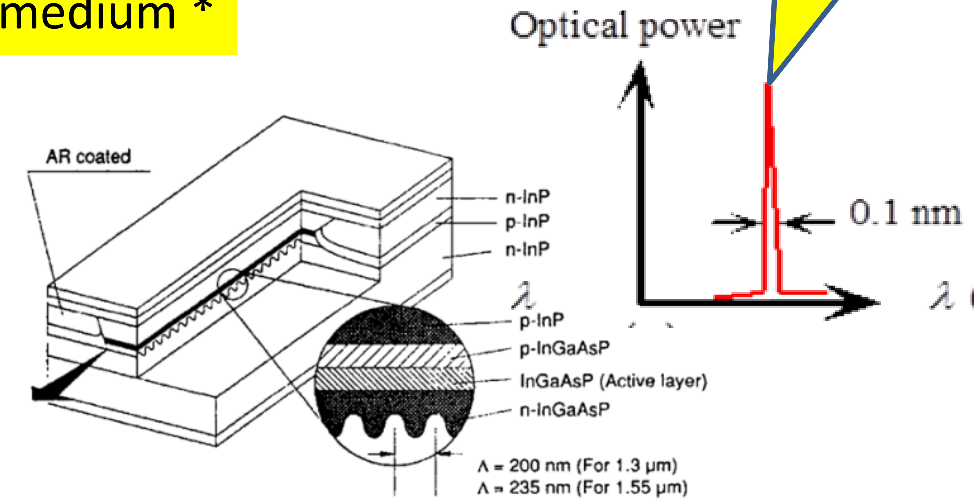

Vertical Cavity Surface Emitting Laser (VCSEL)

- Structure like an LED.
- Advantages of the *VCSEL*:
  - Single frequency operation due to the short cavity
  - the removal of the fragile cleavage process that creates the end mirrors in a standard laser.
- The success of the *VCSEL* depends on incorporating **high reflectivity mirrors** in the structures *

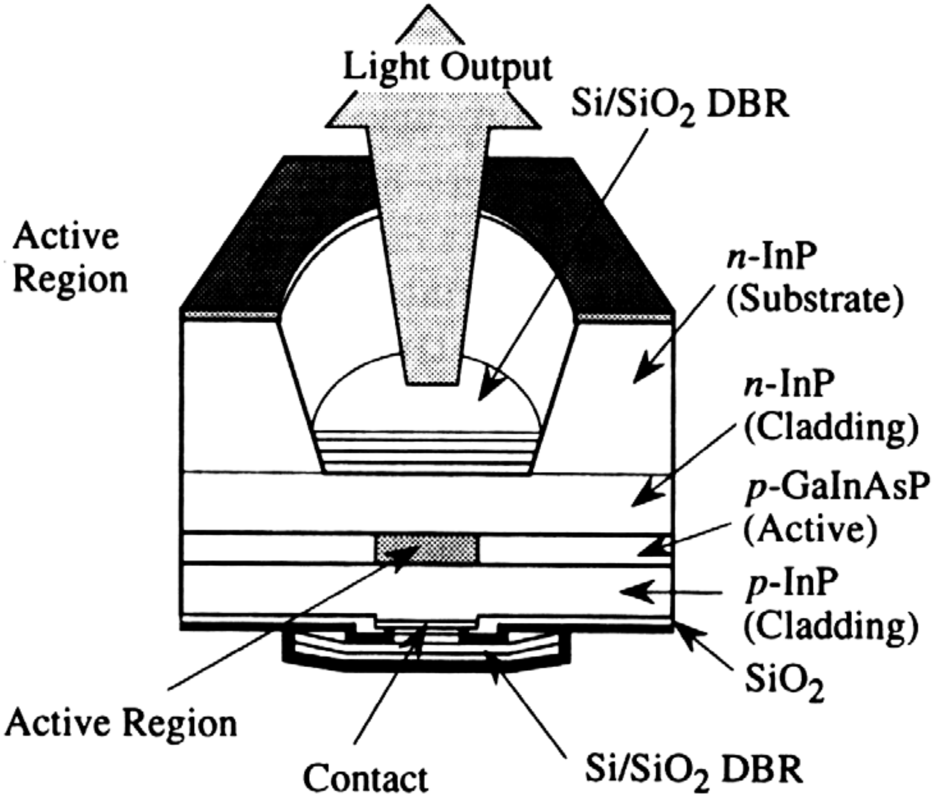

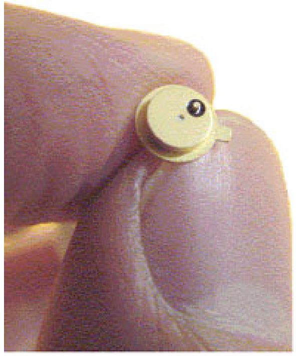

Typical cavity dimension: 5 um x 5 um

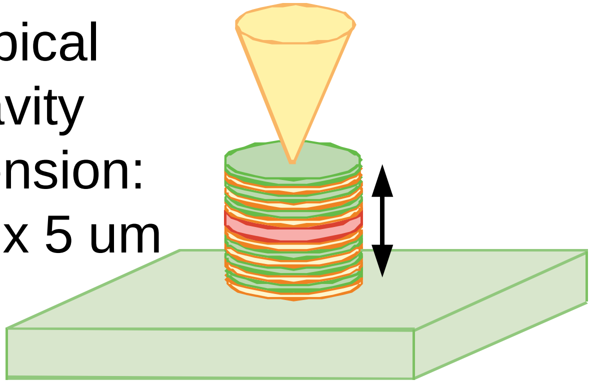

Advantages of VCSEL vs. Edge Emitting Diode Lasers

- Cheaper to manufacture in quantity
  - Edge-emitters cannot be tested on wafer
- More efficient
  - Requires less threshold current for stimulation
- The VCSEL emits a narrow, more nearly circular beam than traditional edge emitters (used in optical fiber)
- High-power - vertical-cavity surface-emitting lasers can
  - Fabricated by increasing the emitting aperture size of a single device
  - Combining several elements into large two-dimensional (2D) arrays.

Edge-Emitting Lasers:

- Fabry-Perot (FP) Lasers
- DFB (distributed feedback) Lasers

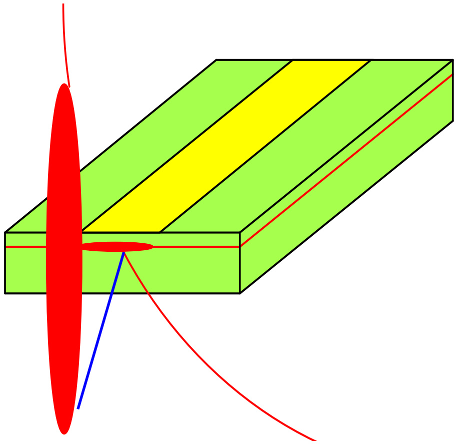

2 um x 500 um Typical

Vertical Cavity Surface Emitting Lasers (VCSEL)

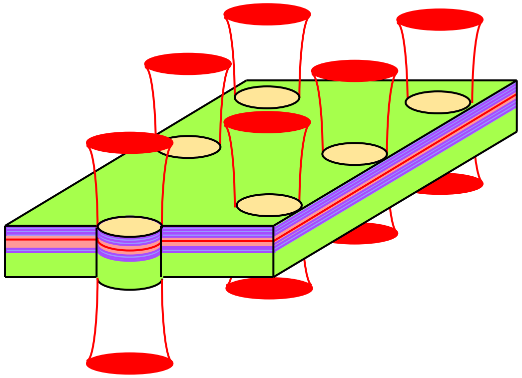

5 um x 5 um Typical

Optical Cable

- Core; made of glass or plastic
  - Plastic
    - Short distance
    - Low frequency signals
  - Glass is Low loss
- Cladding: Core is wrapped in a plastic cladding
  - Lower index of refraction
  - Rays of light leaving the core are refracted back into the core
- Buffer protects the fiber from damage and moisture
- Jacket: Outer jacket holds one or more fibers in a cable *

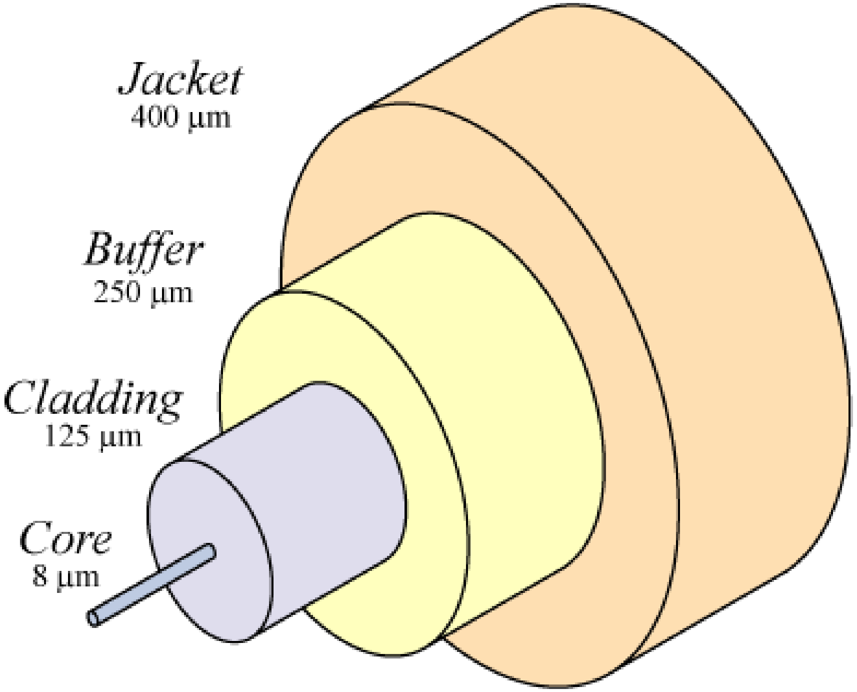

Typical Single Mode Optical Fiber

Objective: Total Internal Reflection

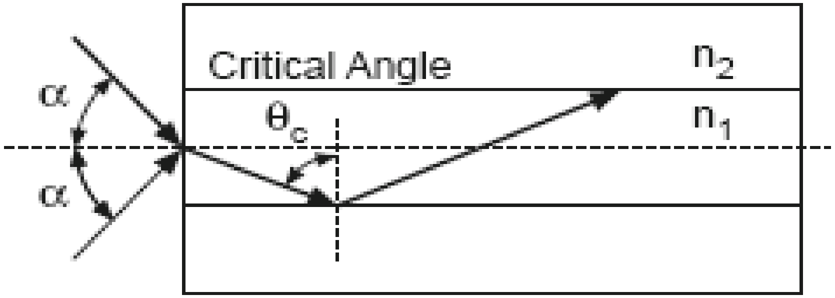

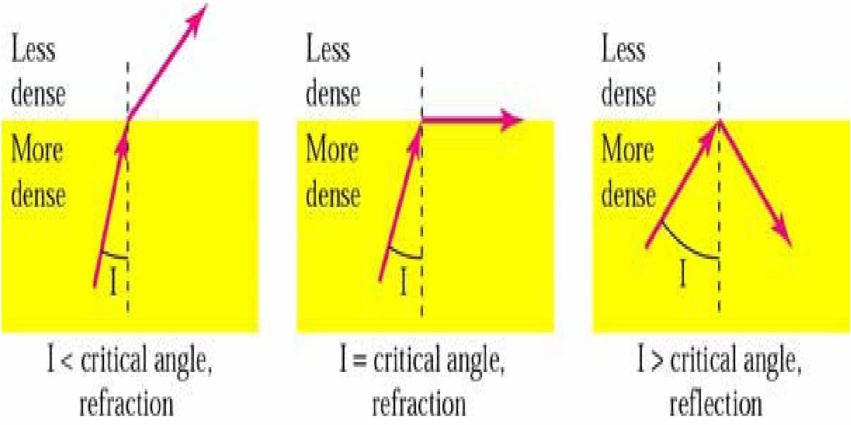

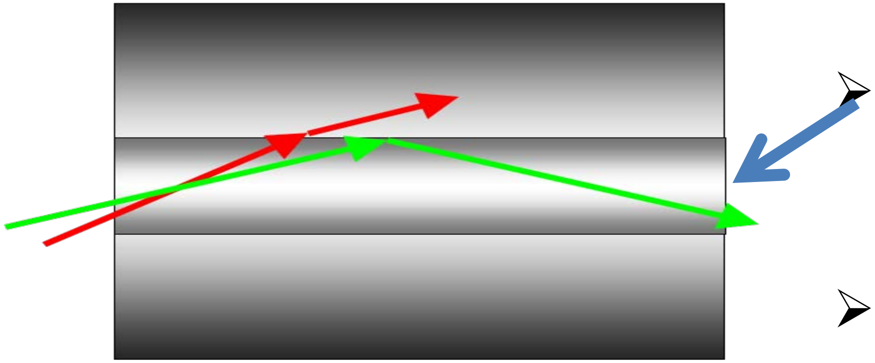

- ➢ Reflected Light: angle greater than the critical angle (θc)
  - ➢ Confined to the core
- ➢ Light traveling less than the critical angle
  - ➢ Lost in the cladding

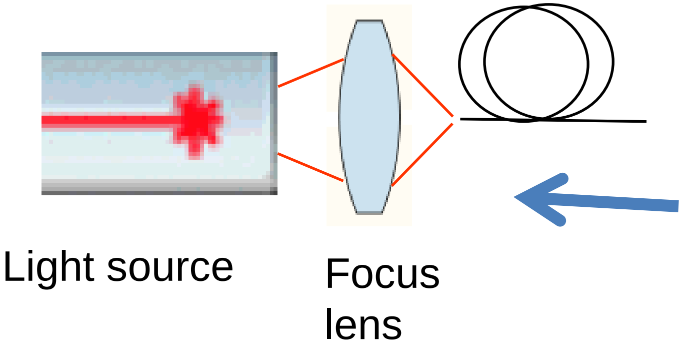

Coupling Light into Fiber

Light has to be focus into the narrow opening of the Fiber Optic cable -

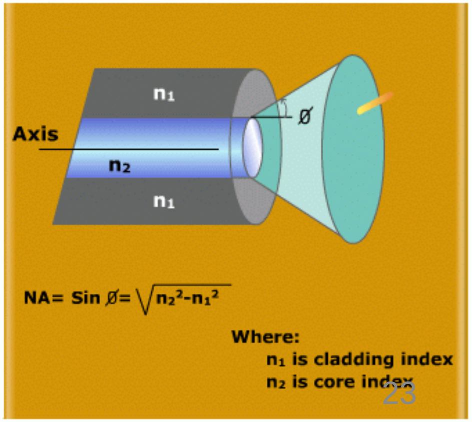

Modal Dispersion

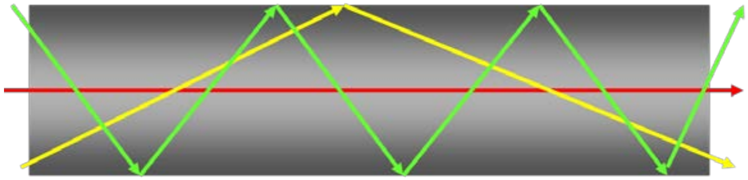

- Light can propagate in a number of modes
- Large diameter fiber excites more modes

- Multimode propagation will cause dispersion
  - Signal arrives at different times
  - Signal spreads & interferes

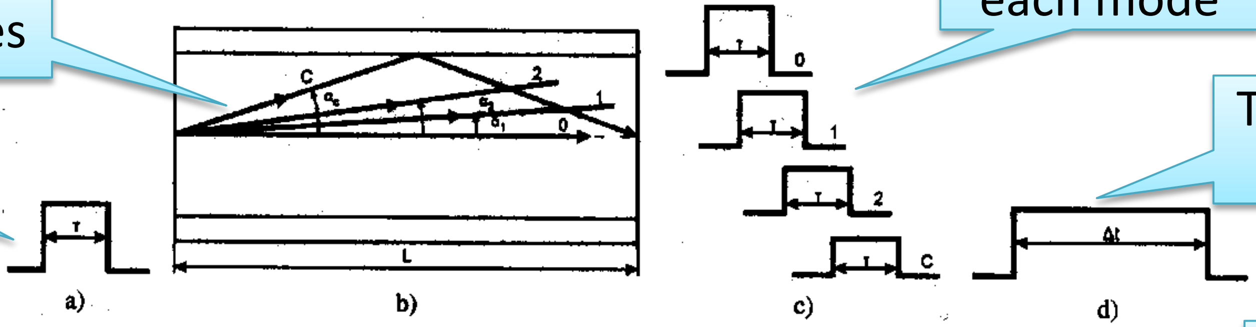

Modes

Input

Output of each mode

Total Output stretched

- Longer cable stretch signals more
  - “1”s stretch into “0”s signal is lost

Next Bit is lost

Larger diameter cable
Less expensive
Less bandwidth
Shorter distances *

Original signal

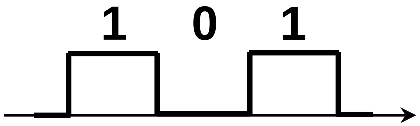

Regenerated signal

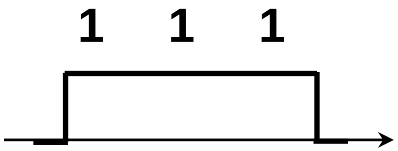

Single Mode Optical Fiber

Small diameter fiber cable allows only one mode

Characteristics

- ➢ More expensive to produce
- ➢ More difficult to couple to light sources.
- ➢ Much less modal dispersion
- ➢ Larger bandwidth
- ➢ Longer distances

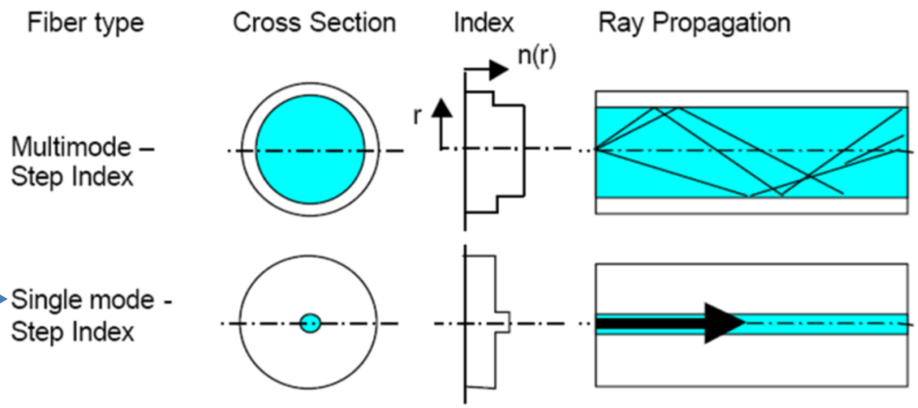

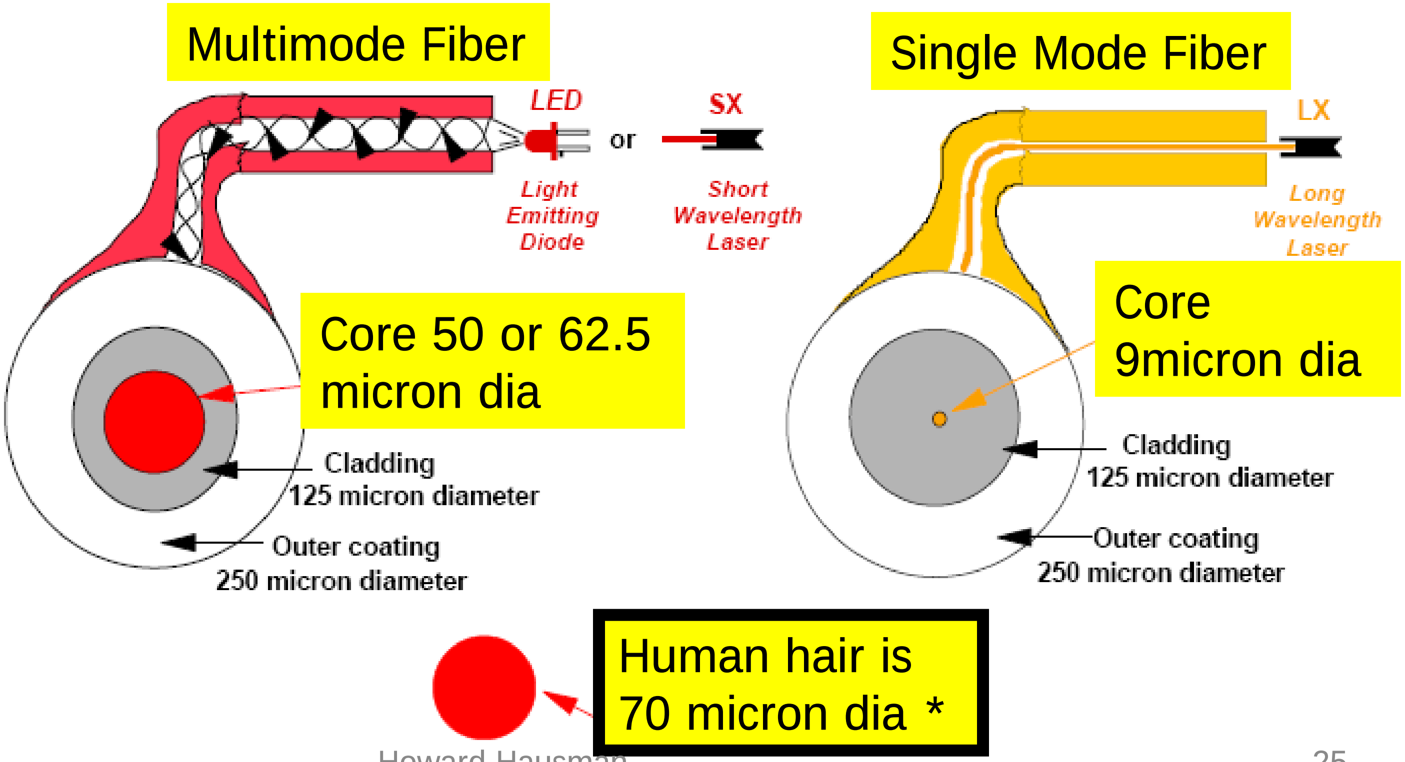
Multimode Fiber

Single Mode Fiber

Core 50 or 62.5 micron dia

Core 9micron dia

Human hair is 70 micron dia *

Chromatic Dispersion

- Dielectric constant is a function of frequency [$\varepsilon_r(f)$]
- Velocity of light (v) is a function of relative dielectric constant [ε_r]
- Light arrives at it destination at different times
- Light spectrum
  - Fabry-Perot Lasers, $\Delta\lambda \approx 4$nm)
  - DFB Lasers, $\Delta\lambda < 0.1$nm)
- Beam spreading is similar to light having multiple modes in a fiber cable
- Spreading of light limits the maximum operational bandwidth

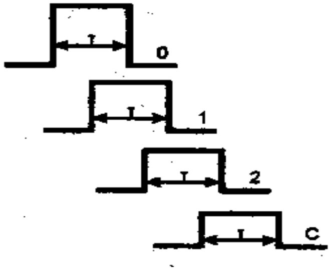

Pulse Spreading

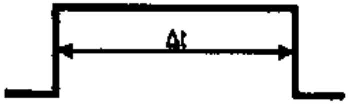

$$v = \frac{c}{\varepsilon_r(f)}$$

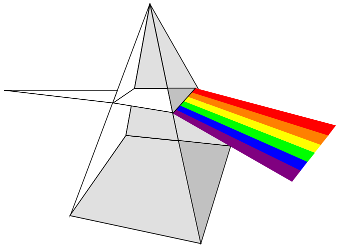

FP Laser Output

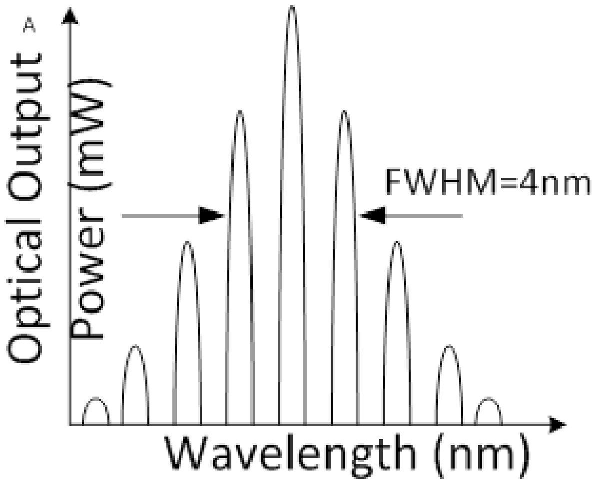

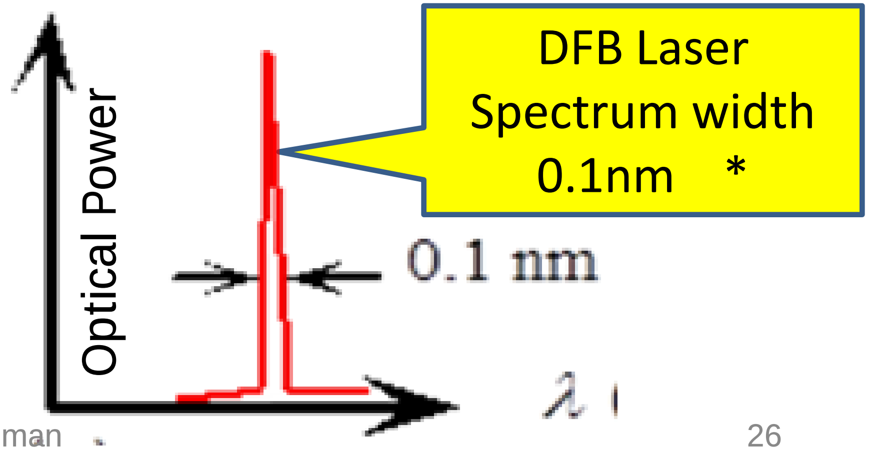

DFB Laser
Spectrum width
0.1nm *

Regions of Fiber Link Operation

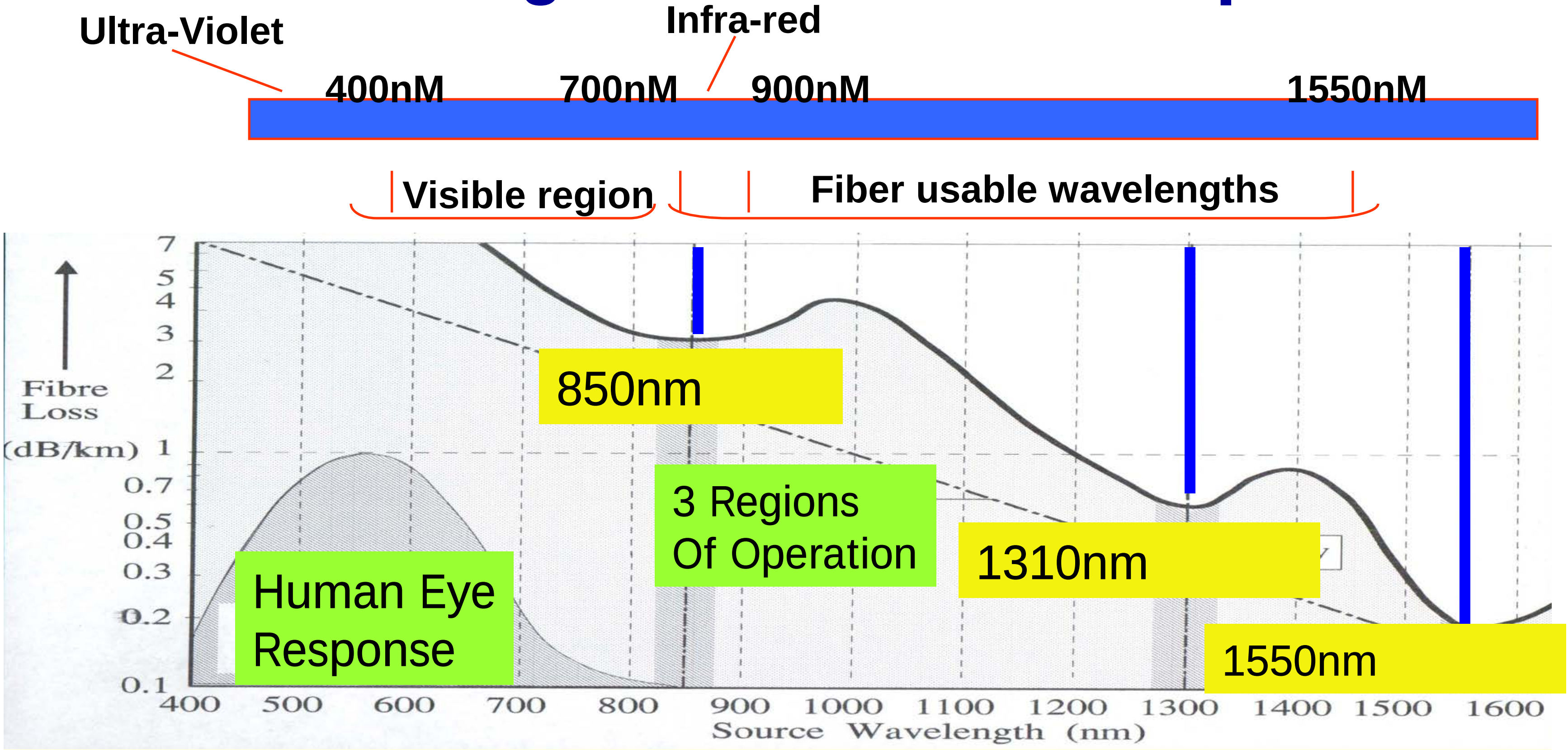

Ultra-Violet

Infra-red

400nM

700nM

900nM

1550nM

Visible region

Fiber usable wavelengths

850nm

3 Regions
Of Operation

1310nm

1550nm

Human Eye
Response

Regions of Operation (Wavelength)
850 nm (Typically uses Multimode Fiber) – Short distance
1310 nm (Lowest chromatic dispersion) – Highest data rate
1550 nm (Lowest Attenuation) – Longest distance *

Optical Cable Loss

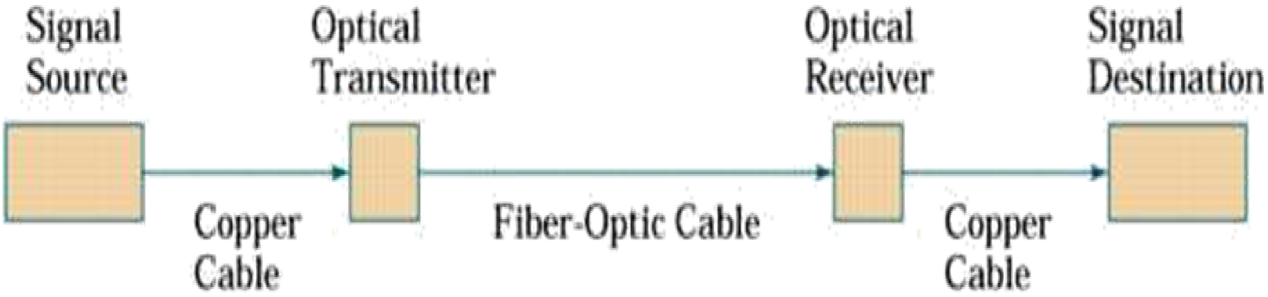

- Loss in Fiber optic cable ($Loss_{Opt}$) does not translate directly to loss in a microwave system
- Optical power is proportional to current
- Photo Receiver emits a current proportional to optical power
- 1 dB in optical loss ($Loss_{Opt}$) is a 2 dB loss to the microwave signal
- $Po/Pin\ loss = 20Log_{10}(Loss_{Opt})$ -

$$Pin = I^2 R$$
$$P_{opt} = I\,K_{laser}$$
$$P_{opt} \sim (Pin/R)^{1/2}\ K_{laser}$$

$$Io = K_{Rec}\ P_{opt} Loss_{Opt}$$
$$Po = (Io)^2 R$$

$$Po = (K_{Rec}\ \ P_{opt} Loss_{Opt}\ )^2 R$$
$$Po = (K_{Rec}\ \ [(Pin/R)^{1/2} K_{laser}\ ] Loss_{Opt}\ )^2 R$$
$$Po = (K_{Rec}\ \ [(Pin/R)^{1/2} K_{laser}\ ] Loss_{Opt}\ )^2 R$$
$$Po = (Pin)\ (K_{Rec}\ \ K_{laser}\ Loss_{Opt}\ )^2$$
$$Po/Pin = (K_{Rec}\ \ K_{laser}\ )\ (Loss_{Opt}\ )^2$$

$$Po/Pin\ loss = 20Log_{10}\ (Loss_{Opt})$$

Optical Receiver

- Typically PIN Diode photo detector
  - P-N type semiconductor regions
  - Intrinsic (I) layer between
- Operated reverse-biased
- Converts light to current

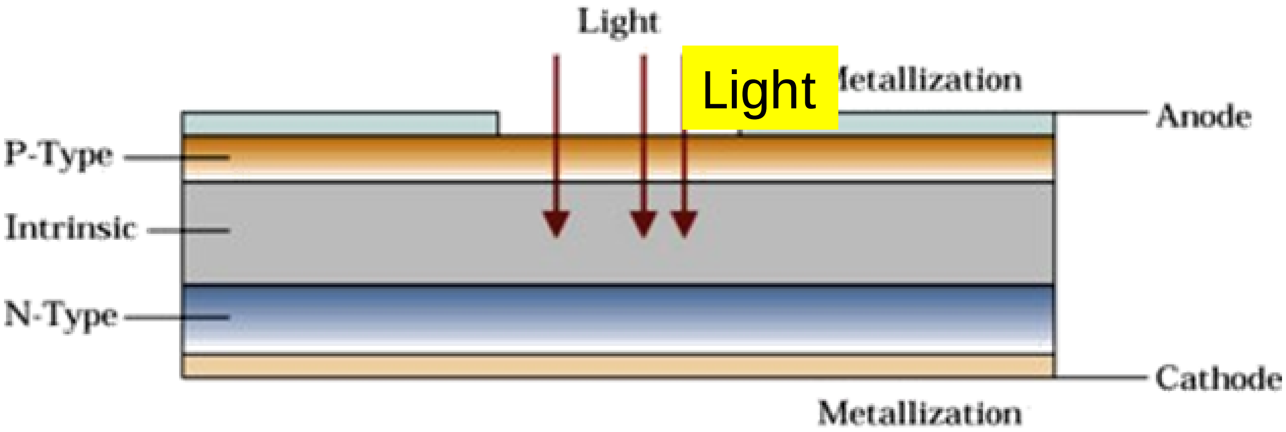

- Incident photons cause electron-hole recombination
  - Results: External photocurrent
- PIN low junction capacitance allows for very high speed

PIN Photodiodes Substrates

- Silicon substrates for shorter optical wavelengths (eg 850nm)
- InGaAs substrates for longer optical wavelengths (eg 1310/1550nm) *

Output Current

- Diode is reverse biased
- Absorption of photons excite electrons into the conduction band
    - Holes in the valance band
- Absorption requires the photon energy (hc/λ) > Eg (material band gap.)
- Reverse bias current increases with increasing incident optical power.
- Dark current is the diode reverse bias drift current
    - No incident optical power

Typical PIN diode characteristic

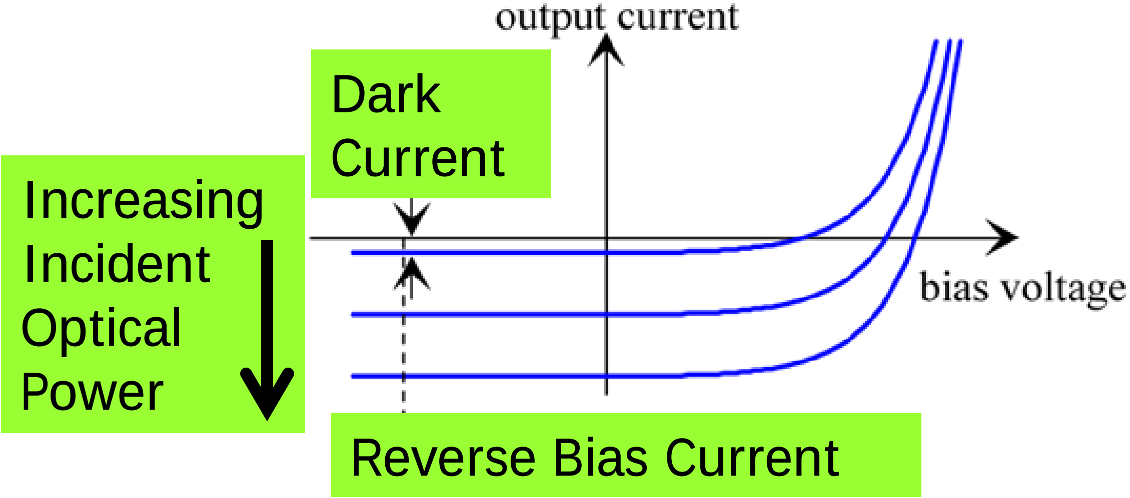

Dark Current

Increasing Incident Optical Power

Reverse Bias Current

$$\lambda < \frac{hc}{E_g} = \frac{1.24}{E_g(eV)}(\mu m) \qquad \frac{hc}{\lambda} > E_g$$

Optical Diode Transfer Characteristic: Responsivity

- Amount of current produced per unit of input optical power in mA/mW
- (Electrical current out) / (Optical power in) -

Characteristics of Key Elements in a Fiber Optic Links

Typical Fiber Optic Link used in a Microwave/RF System

Key Elements

- Interface & Matching
- Laser
- Fiber Optic Cable
- Photo Detector
- Interface & Matching Network

Goals

- Analyze the link as a microwave component
- Primary parameters of interest
  - Gain
  - Noise figure
  - 3rd order intermodulation Intercept point

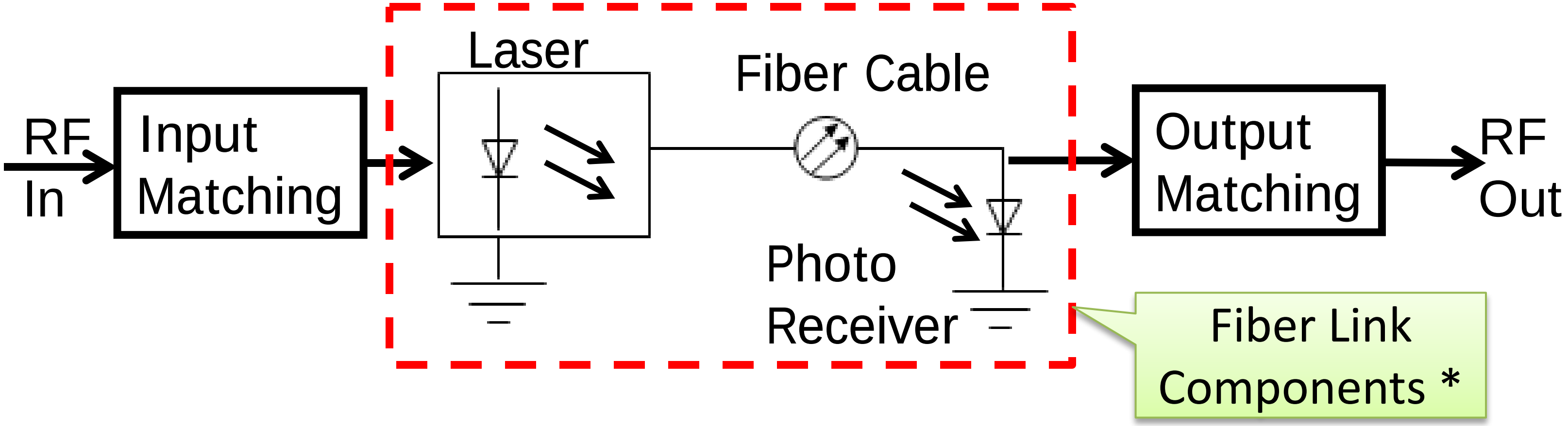

RF In

Input Matching

Laser

Fiber Cable

Photo Receiver

Output Matching

RF Out

Fiber Link Components *

Laser Operating Characteristics

Laser Biasing & Modulation

- DFB Lasers transfer characteristic are similar to a forward biased diode
- Spontaneous photons are emitted under small DC currents (incoherent)
  - Acts as a Light Emitting Diode (LED))
- Increasing diode current increases generated photons
- At current => Ith (Laser Threshold)
  - Photon multiplication overcomes losses from the cavity
  - Stimulated photons sustain laser oscillation (open loop gain >1)
- Coherent light is emitted
- Laser thresholds (Ith) occur around 40 to 70mA DC
- Further increases in current increases Laser output power

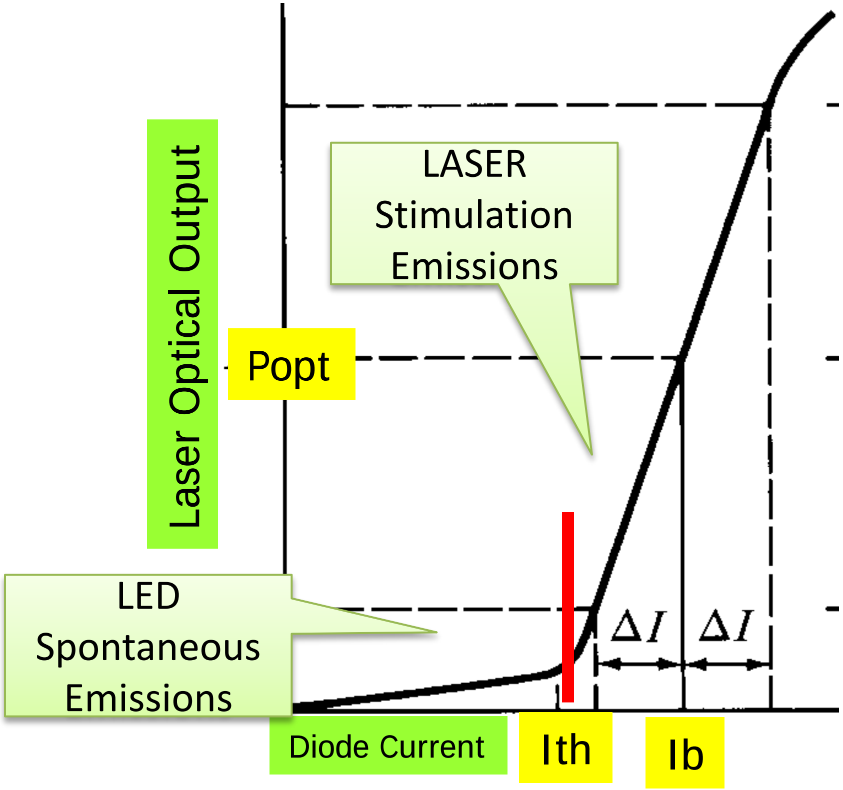

- Optical power (Popt) is typically in the 5 mW to 10 mW range -

Laser Interface

- RF & Microwave signals are AC coupled through a Bias Tee
- Microwave signals ride on top of a DC bias current
- RF information Amplitude Modulates (AM) the optical signal
- Typical small signal transfer characteristic
  - Nominally 0.14 Watts / Amp
  - (Optical power in Watts) / (Microwave current drive in Amps)
- If the input RF signal crosses threshold (Ith) distortion will occur *

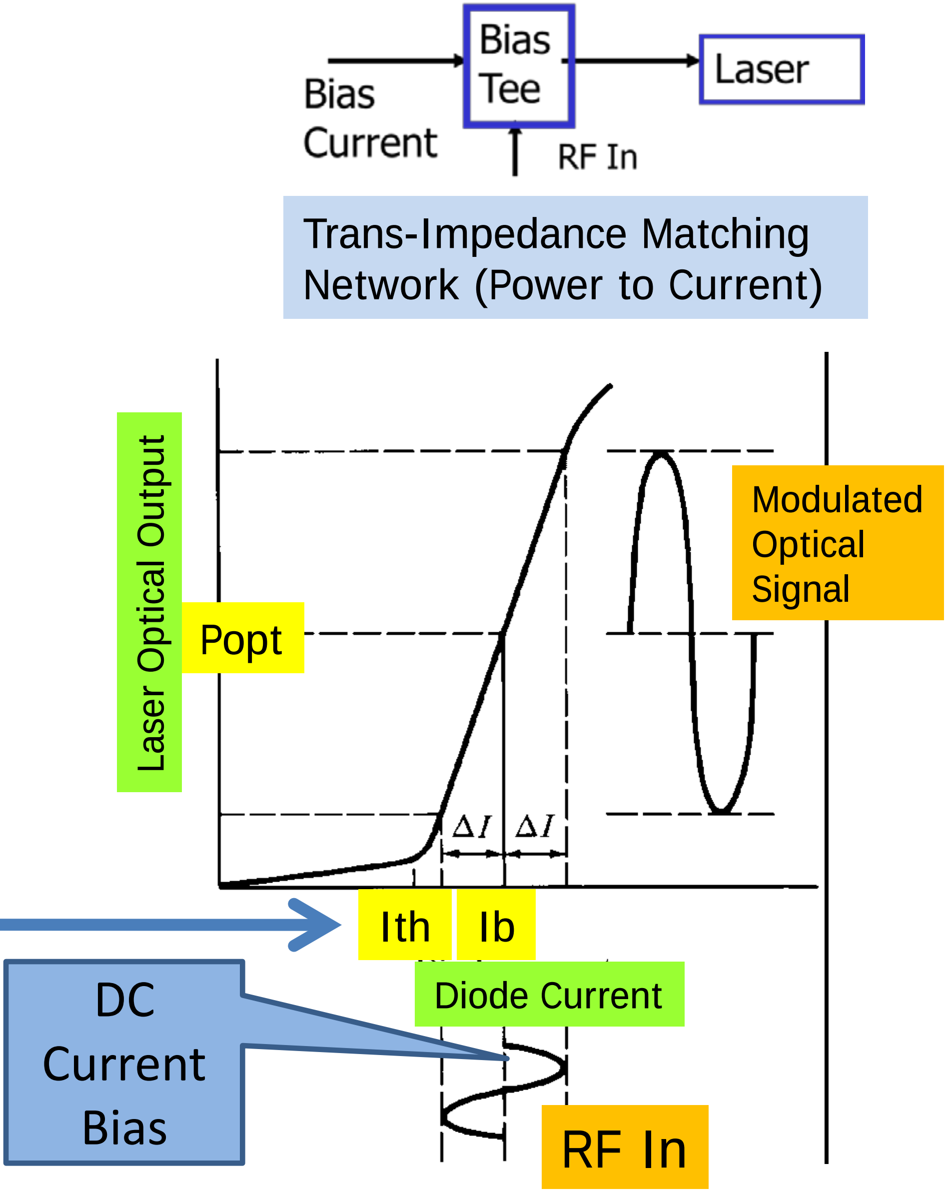

Temperature Variation of Laser Thresholds

- Typical Lasers threshold variations as a function of temperature
- Distortion due to temperature variations
- Carrier concentration change with temperature
- Temperature stabilization techniques are often used -

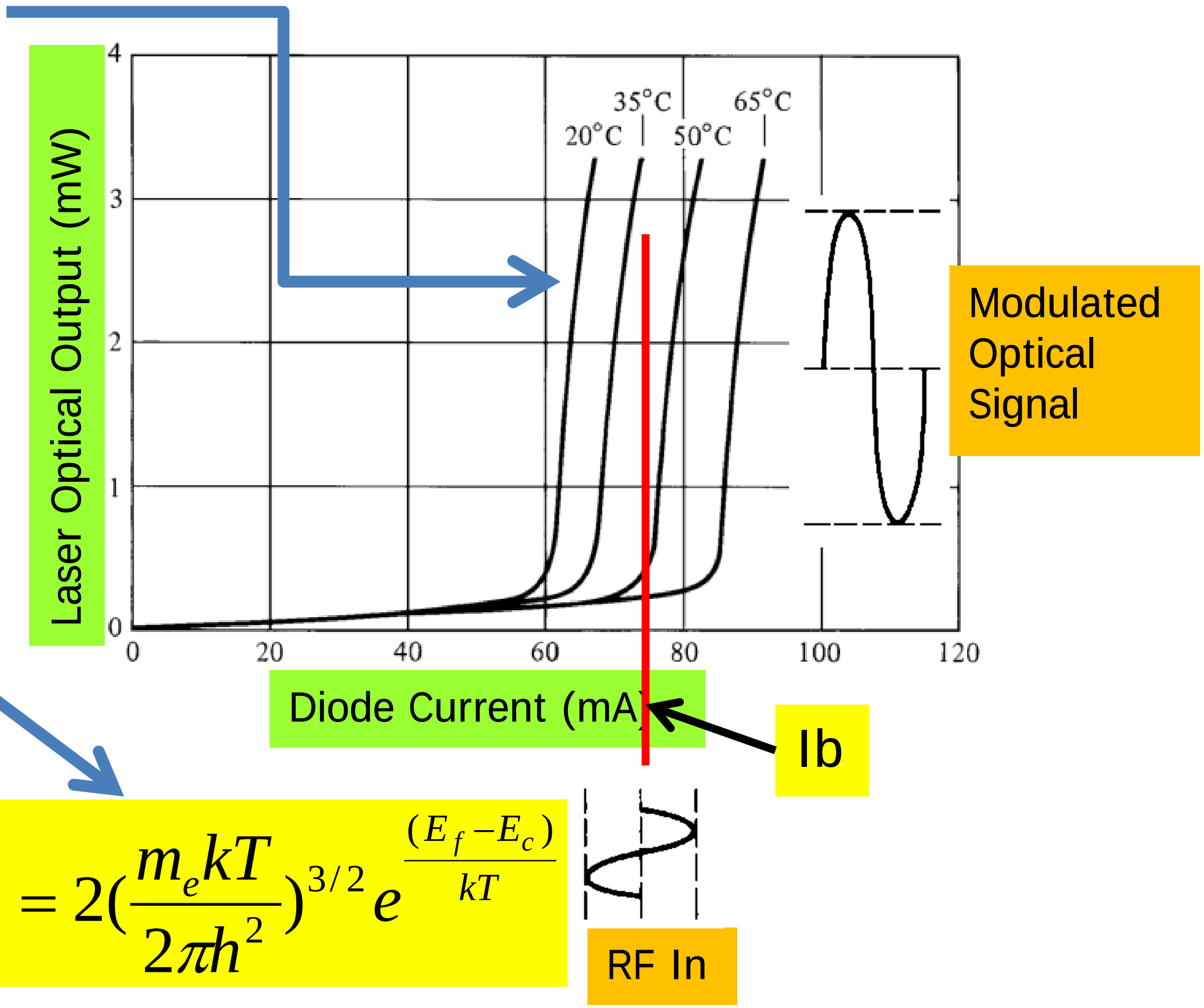

$$n = 2\left(\frac{m_e kT}{2\pi h^2}\right)^{3/2} e^{\frac{(E_f - E_c)}{kT}}$$

Thermal Properties of DFB Lasers

High Temperature

- *Light output decreases*
- *Slope efficiency decrease*
- *Laser is more non-linear*
- *Quality lasers are cooled*

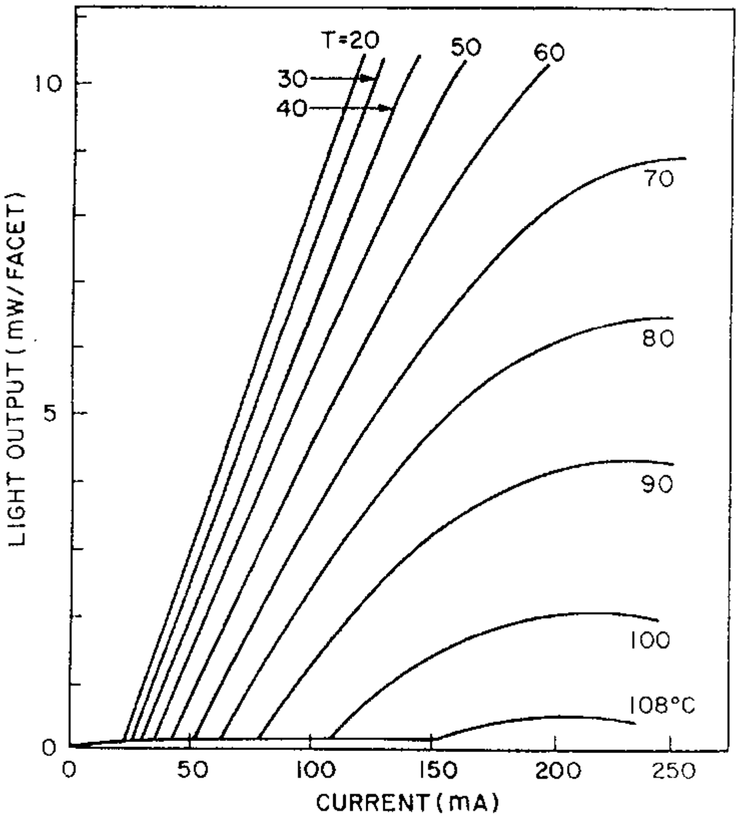

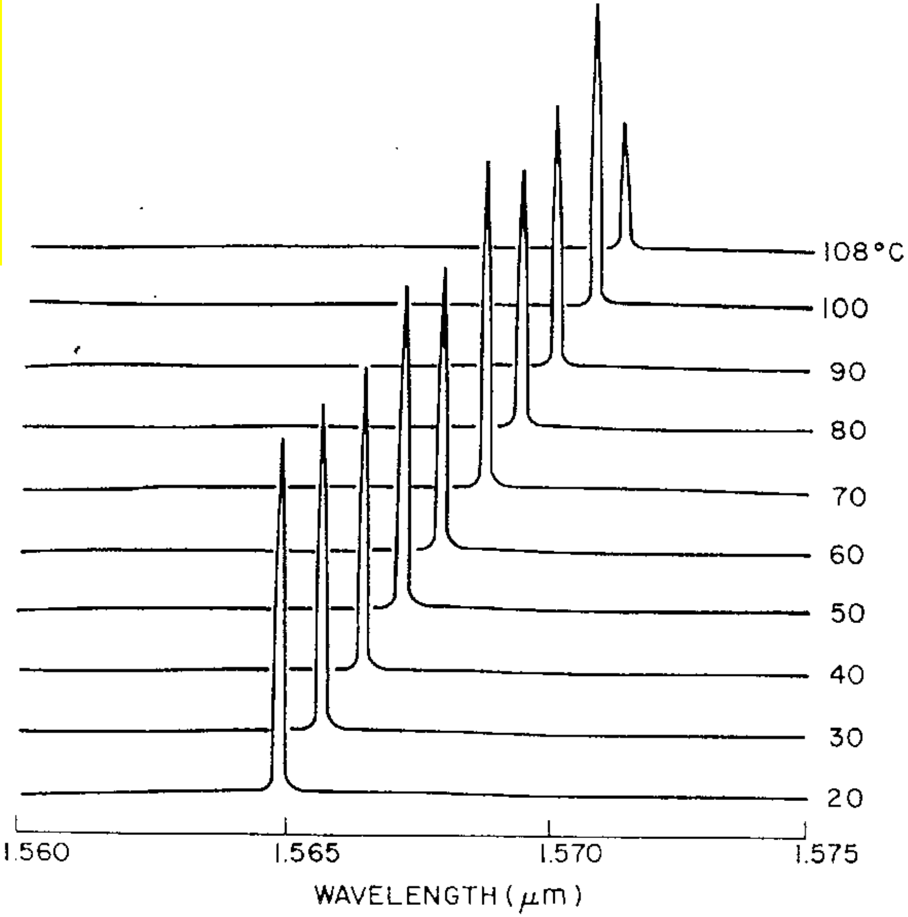

Wavelength shifts with temperature *

Agrawal & Dutta 1986

Fiber Optic Cables

- Loss in the fiber optic cable (1550nm) is nominally 0.15dB / kilometer
- Interface connector loss is approximately 0.1 dB/connection
- All optical losses converted to microwave losses
  - 2dB (microwave) / dB (optical)
  - 1.5db optical loss → 3.0dB link loss (Microwave to Microwave) -

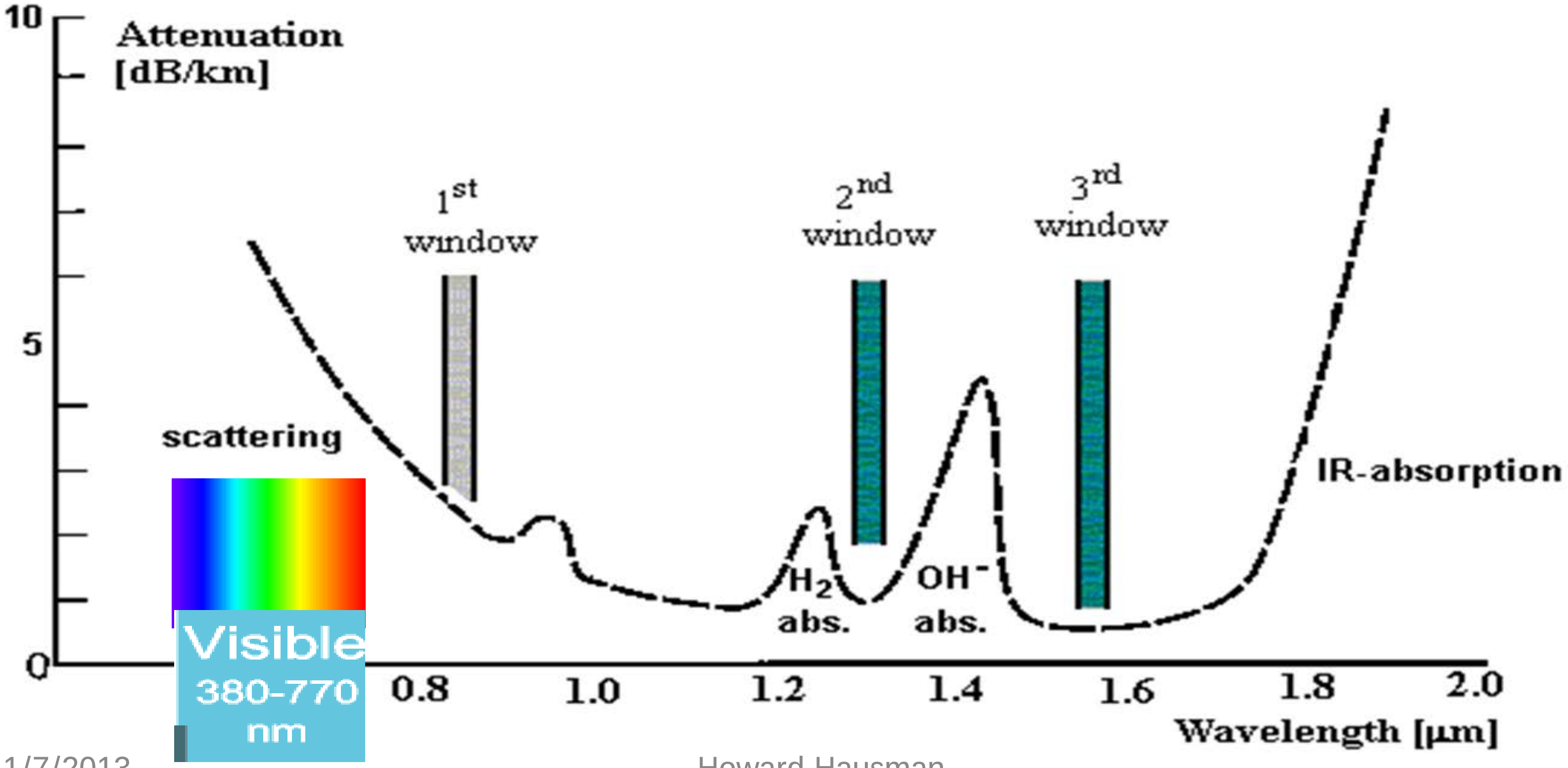

Photo Detector

- Photo detector demodulates the AM optical carrier
- Converts optical power to microwave current

- Average optical power converts to a DC current
  - DC is Filtered out
- Responsivity: Transfer characteristic,
- Amps / Watt
  - Optical power in watts to microwave current in amps
- Responsivity factor is typically 0.8 A/W.

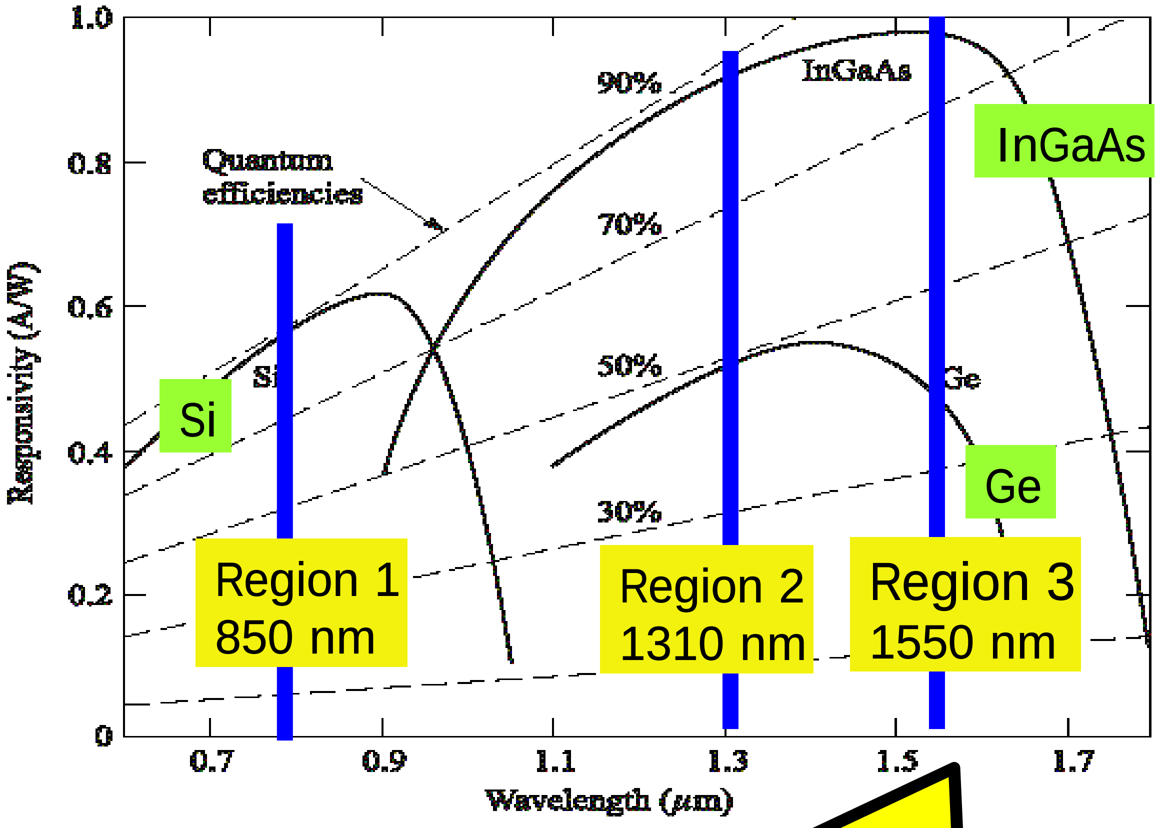

At 1550 nm InGaAs photo detectors have responsivity close to unity *

Analysis of a Fiber Optic Link

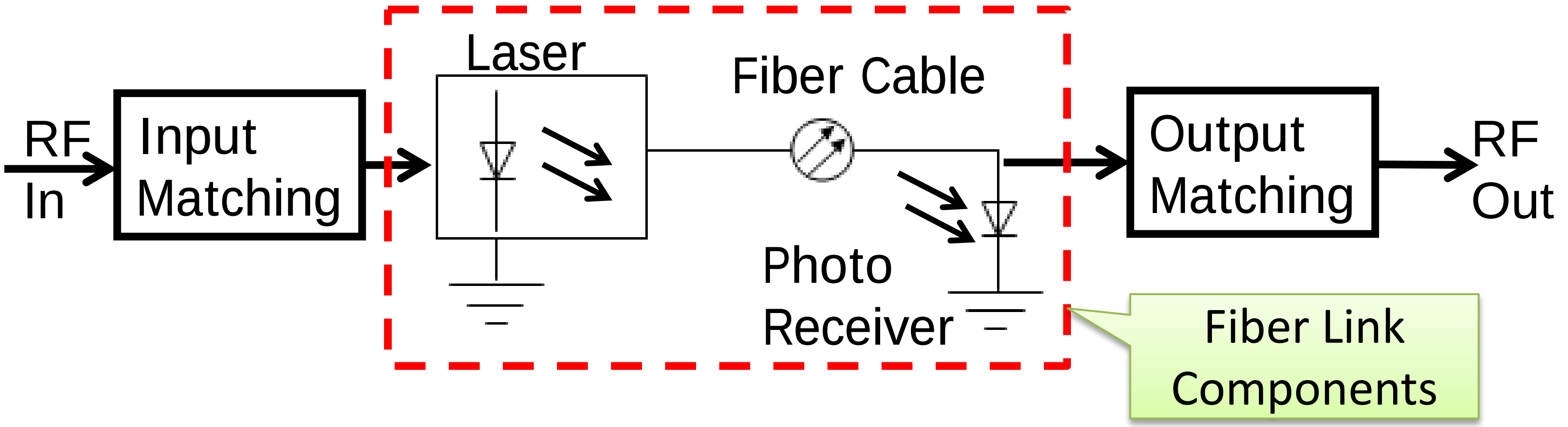

- Typical Fiber Optic Link with input & output matching networks
- Laser Input impedance is very low
  - PN Junction has a high bias current
  - A low loss Input matching circuit over a wide band is very difficult
- RF Signal loss in dB is 2x Fiber Cable loss
- Optical Receiver output impedance is usually above 50 ohms
  - Output matching network is less difficult than the input matching network *

Notes on Noise & Distortion in an Optical Link

- Calculate the dominant noise from each component
  - Laser – Relative Intensity Noise (RIN)
  - Neglect the noise in the Fiber Optic Cable
  - Photo Diode – Shot Noise
- Noise is accumulated at the output and reflected to the input
- Noise figure is the degradation in the signal to noise ratio (S/N)

- Thermal Noise = $10\text{Log}_{10}(kTB)$
  - -174dBm/Hz @ 298^{0}K
- k: Boltsman Constant
- T: Temperature (^{0}K)   &   B: Bandwidth (Hz)
- Component Input Noise = kTBF
- F=Noise Factor (added noise)
- Noise Figure (NF) = $10\text{Log}_{10}(F)$

Note: Intermodulation distortion is assume small and is not addressed on the optical side of the link   *

Laser Input Matching

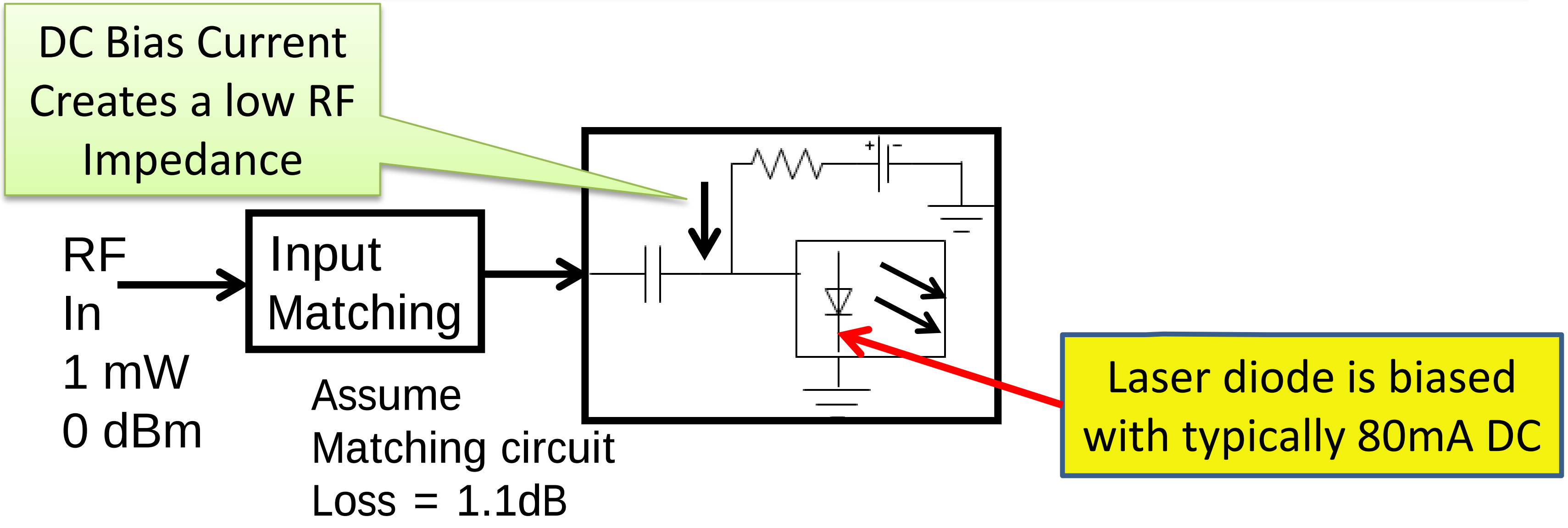

DC Bias Current Creates a low RF Impedance

RF In
1 mW
0 dBm

Input Matching

Assume Matching circuit Loss = 1.1dB

Laser diode is biased with typically 80mA DC

- RF output Impedance is Typically 50Ω & Laser input is close to 5Ω
- Example: Input is 1 milliwatt into 50Ω into the matching network
- Matching network loss 1.1dB ➔ 0.776 milliwatts into Laser (Pin_{Laser})
- If we assume the laser RF input impedance is 5 Ω (R) and 0.776 mW
- RF current (RMS) into the laser is I_{RF} = SQRT[(Pin_{Laser})/R] = 12.46 mA *

Laser – Gain & Signal Level

Current into Laser (RMS)	12.46 mA
Current into Laser (Peak)	17.62 mA

- Ib – Ith = ΔI >= 17.621 mA for linear transmission
- Bias should be > 20mA above threshold

Laser Converts input current to optical power

- Optical Power (W) / Input current (A)
- Transmisivity (ν): small signal laser transfer function (mW/mA)
- MDC: CW (Large signal) transfer function (W/A)

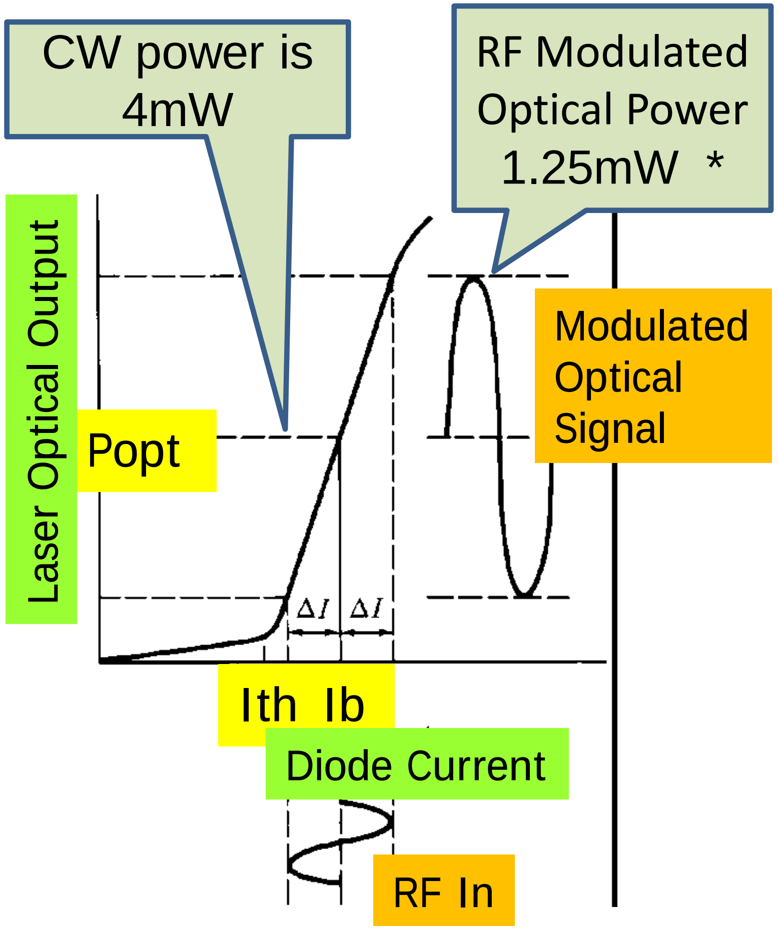

CW power is 4mW

RF Modulated Optical Power 1.25mW *

Modulated Optical Signal

- ν (Nu) and MDC are assumed the same = 0.1 Watts Optical/Amp (RF or DC)
- For I_{DC} (DC Bias Current) = 80mA and I_{th} (Laser Threshold Current) = 40mA
- Average Optical output power = (Idc – Ith)*MDC = (80 – 40) * 0.1 = 4 mW
- RF (RMS) current: 12.46 mA ➔ Laser RF output power = 1.25 mW ➔ 0.96 dBm

Laser Noise- Relative Intensity Noise (RIN)

- Multiple noise sources in the laser,
- Dominant noise is the Relative Intensity Noise (RIN)
- Square of optical noise (PoptNoise) with respect to the square of optical power (PLaser) in a 1 Hz bandwidth given in dB/Hz.

$$\mathrm{RIN} := \frac{\mathrm{PoptNoise}^2}{\mathrm{PLaser}^2}$$

- PoptNoise: Optical noise at the output of the Laser
- PLaser: Average Optical output power of the Laser

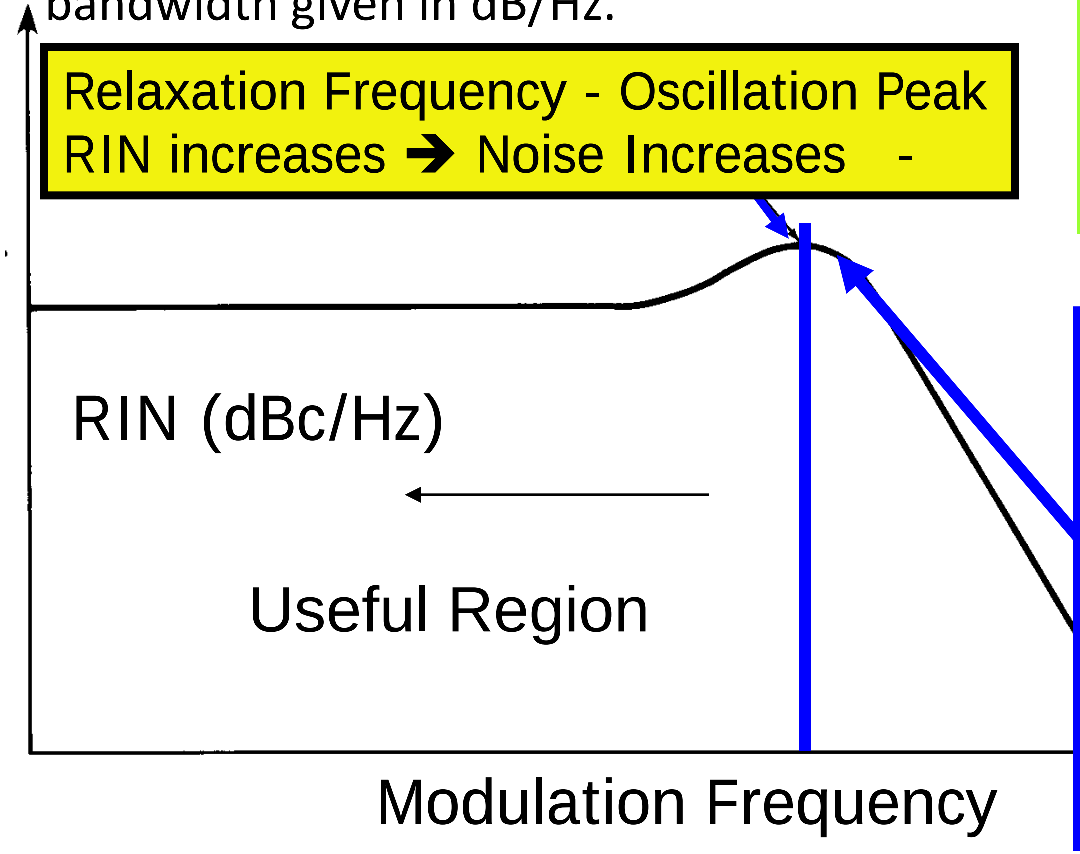

Relaxation Frequency - Oscillation Peak
RIN increases ➔ Noise Increases -

- ☐ Optical Noise is proportional to optical power
- ☐ Increase in Modulation Frequency
  - ☐ RIN increases
  - ☐ Optical power is constant
  - ☐ Increases noise

Calculating Laser Noise (RIN)

RIN	-155	dBc/Hz	3.162E-16	
RF Optical Power at Laser Output	1.246	mW	0.96	dBm
PoutOptDC	4	mW	0.004	Watts
Modulation Index	56%			
RIN Optical Noise Out of the Laser	7.11E-08	mW	7.113E-11	Watts
RIN Input Noise Current	7.11E-10	A		
Input Resistor (Small Signal) Rlin	5	Ohms		
RIN Noise Power at Laser Input	2.53E-18	Watts	2.530E-15	mW
RIN Noise Power at Laser Input	-145.9691	dBm/Hz	2.53E-15	mW
Effective Noise Figure of Laser	28.01	dB		

$$RIN := \frac{PoptNoise^2}{PLaser^2}$$

- Assume RIN = -155 dBc/Hz
- $PoptNoise^2 = RIN \cdot PLaser^2$
- Optical Noise (RIN) is a function of average power (4 mW)
- Output Noise = 7.11E-08 mW ➔ -71.48 dBm/Hz
- Calculate input noise and effective laser noise figure
- Input Noise (before Matching circuit) = -145.97 dBm/Hz
- Noise Figure = 28.01 dB
- Modulation Index (m)=56% ➔ Lower m ➔ lower signal; Constant Noise *

Notes on Laser Dynamic Range

Noise Figure is a degradation of S/N

- Laser RIN Noise is a function of Average Power
- Signal relates to RF Signal not Average Optical Signal

$$ModulationIndex = \sqrt{\frac{P_{RF}}{P_{Optical}}}$$

- Lower the Optical Modulation Index ➔ Lower Signal
  - Ex; m = 56%
  - Same Noise
  - Lower S/N
  - Higher NF

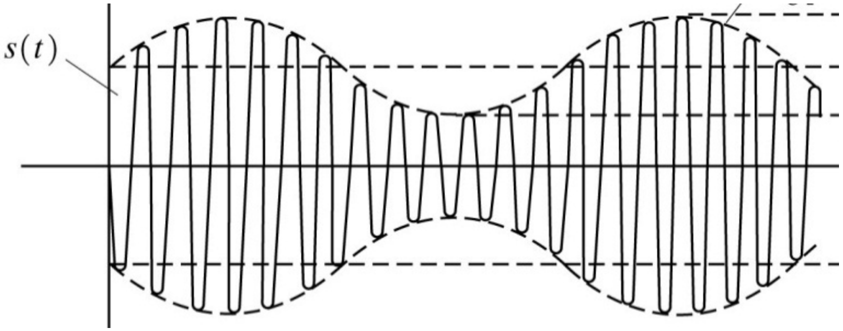

Laser is assumed linear as long as modulation current is not near Threshold current *

Fiber Optic Cable

- Cable loss is nominally 0.15 dB/kM
- Connection loss is assumed at 0.1 dB per connection
- Two connections and 1 kM of cable = a 0.35 dB loss
- Average output power of Cable = 3.68 mW ➔ (5.65 dBm)
- Optical small signal power out of the cable is 1.14952 mW (0.61 dBm) *

- Average Optical output power out of the Laser = 4 mW
- Laser RF output power = 1.25 mW ➔ 0.96 dBm

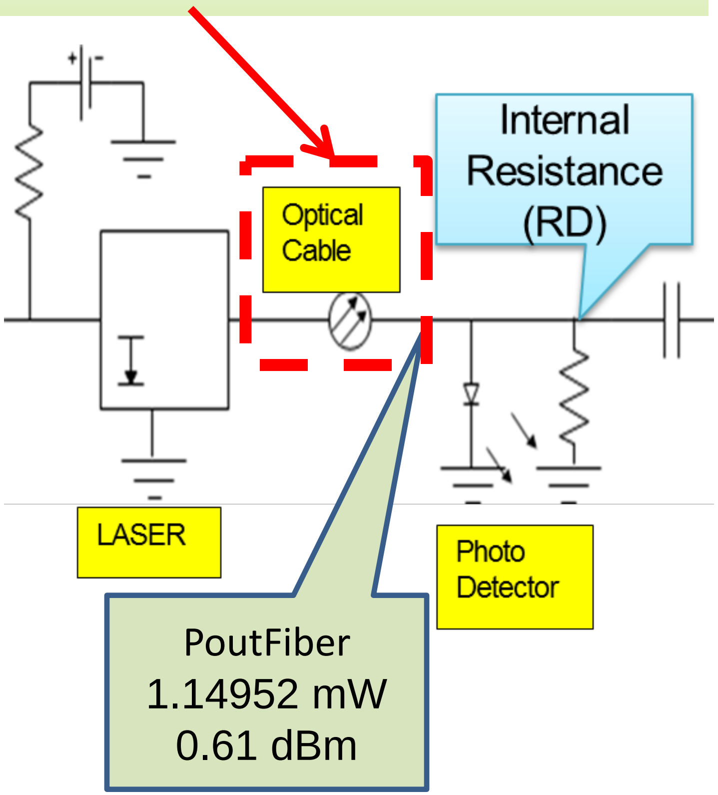

Fiber Loss	0.15	dB/kM		
Conn Loss	0.1	dB/Conn		
No. of Connections	2			
Distance	1	kM		
Fiber Loss	0.35	dB	0.92	
PoutFiber	1.14952	mW	0.61	dBm

Fiber Optic Cable Signals

Fiber Cable Input Signals

RF Optical Power at Laser Output	1.246 mWatts
PoutOptDC	4 mW
RIN Optical Noise Out of the Laser	7.11E-08 mW

Fiber Cable Output Signals

Fiber Loss	0.35 dB
Fiber Out RF Signal Optical Power	1.149516 mW
Fiber Out Average Optical Power	3.690286 mW
Fiber Out Optical Noise Power	6.56E-08 mW/Hz
Fiber Out Cable Noise	0 mW/Hz
Fiber Out Total Optical Noise	6.56E-08 mW/Hz *

Photo Receiver

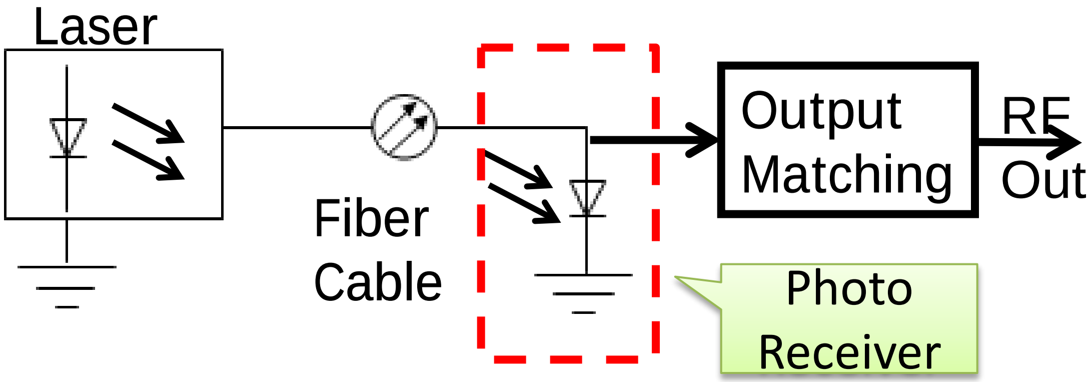

Photo detector uses an InGaAs diode for maximum signal transfer in the 1550nM band

- Responsivity nominally
  0.8 A (RF) / W (Optical)
- Small & large signal Responsivity approximately the same
- Average output power of Optical Cable = 3.68 mW → (5.65 dBm)
- I_{DC} (Average current) = 2.95 mA
- Small signal optical power is 1.15 mW
- I_{RF} (RF Current) = 0.92 mA of RMS
- Fiber Out Total Optical Noise 6.562E-08 mW/Hz
- Noise Current (Laser + Fiber Cable) = 5.24989E-08 mA   *

Optical Receiver Noise

- Sources of noise
  - Dark current (I_D) (charge recombination in space charge region), Diode is reverse biased
  - Shot noise (I_P) is function of the average (CW) input optical power
    - **Random photons in the photo diode producing a noise current**
  - Thermal Noise (I_T) (Random motion of electrons)
- All adds to Id (diode noise current)
- Photo Diode Noise Power

  $= I_{noise}^2 \cdot Rd$

- $I_{noise}^2 = 2 \cdot q \cdot I_d \cdot BW$
- $I_d = I_p + I_T + I_D$
- $I_p >> I_T + I_D$
- $I_{noise}^2 \approx Ishot^2 = 2 \cdot q \cdot I_p \cdot BW$
- q is the electron charge

  1.60 E-19 Coulombs
- BW is bandwidth usually normalized to 1 Hz
  - Noise power ($Ishot^2 \cdot Rd$) is proportional to noise bandwidth
- Shot noise increases as average optical power increases *

Photo Diode Signal & Noise

Output RF Current (RMS)	0.919613mA	Signal
Average (DC) Diode Current	2.952229mA	Average
Noise Current (Laser + Fiber Cable)	5.25E-08mA	Input Noise
Rd Diode Open Circuit Resistance	100Ohms	
Pout RF Power into Matched Load	0.021142mW	-16.75dBm
Pout Noise (Laser + Fiber Cable)	6.89E-17mW	-161.62dBm/Hz
Photo Diode Shot Noise	4.73E-17mW/Hz	-163.25dBm/Hz
Total Noise Out	1.16E-16mW/Hz	-159.35dBm/Hz

- Diode DC Current = 2.95 mA
- $I_{noise}^2 \approx Ishot^2 = 2 \cdot q \cdot I_p \cdot BW$
- Shot Noise power at the photo detector output is: -163.25 dBm/Hz
- RF power into the matching circuit = $[(I_{RF})/2]^2(RD)$
- Output signal level = -16.75 dBm
- Gain to Photo Diode output = -16.75 dB
- All of the noise sources are added non-coherently
- Total noise out of Photo Diode = -159.353 dBm/Hz *

Output Matching Network & Link Output

Matching Loss	0.9	-0.46dB
RL RF Load Impedance	50Ohms	
RF Out	0.019028mW	-17.21dBm
Noise Out	1.046E-16mW/Hz	-159.81dBm/Hz
Gain to Input	-17.21dB	0.0190
Noise Input	-142.60dBm/Hz	
Link Noise Figure	31.38dB	

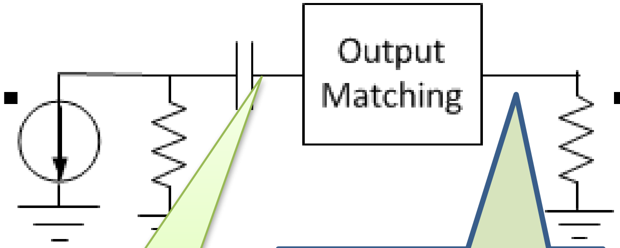

RF signal
Input Z =RD
Output Z=RL

Pout into
Matched load
-17.21 dBm

- Matching Loss: 0.46 dB
- Output signal level = -17.21 dBm
- Link Gain = -17.21 dB
- Noise Output = -159.81 dBm/Hz
- Noise input = -159.81 dBm/Hz –(-17.21dB) = -142.6 dBm/Hz
- Link Noise Figure = -142.6 dBm/Hz – 174 dBm/Hz = 31.38 dB *

Optical Link with Input & Output Amplifiers

Components

DESCRIPTION	GAIN dB	dB NOISE FIGURE dB	Total OIP3 dBm OUT	Carrier Power dBm	CUM GAIN dB	CUM NF dB	OIP3 3rd dBm	IIP3 3rd dBm
				2.8	**22.8**	**12.1**	**23.2**	**0.3589**
INPUT LEVEL			**100**	**-20.0**	0.0	0.00	100.0	100.0
	0	**0**	**400**	-20.0	0.0	0.00	100.0	100.0
Input Amp	**20**	**3**	**25**	0.0	20.0	3.00	25.0	5.0
Fiber Link	**-17.2**	**31.38**	**30**	-17.2	2.8	11.97	7.8	5.0
Post Amplifier	**20**	**3**	**25**	2.8	22.8	12.11	23.2	0.4

- Optical Link can be characterized as Microwave Component and inserted into any analysis of a microwave system
  - Gain: -17.2 dB
  - Noise Figure: 31.38 dB
  - OIP3: +30 dBm

- Optical Link with Input & Out Amplifiers
- Gain: 22.8 dB
- Noise Figure: 12.1 dB
- OIP3: 23.2dBm *

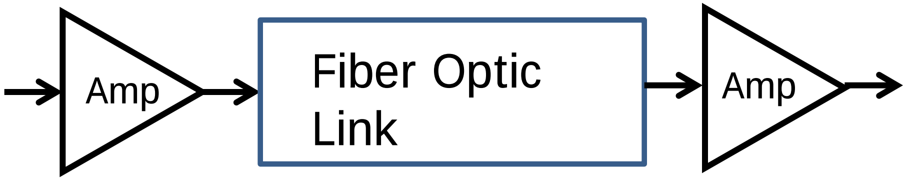

Summary

Limitations using Fiber Optic Links

- Frequency limitation:
  - Direct modulation of a DFB Laser is frequency limit is approximately 20 GHz.
  - Noise increases as the bandwidth increases.
- Dynamic range is affected
  - Additive noise
  - Increased non-linearity
  - Effects must calculated and added to the systems chain analysis to see the effect on system performance
- Cost:
  - Fiber optic links are more costly than coaxial cables
  - Use a simple cable when possible *

Chain Analysis

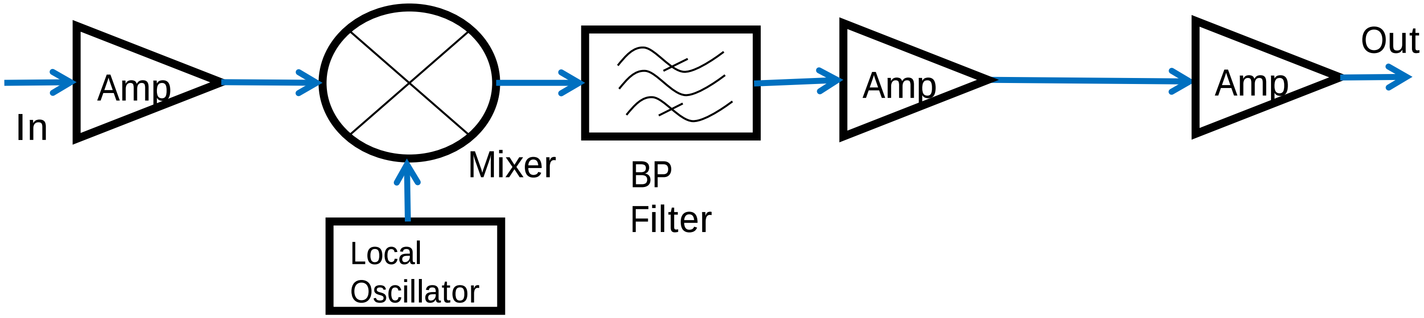

Device Characteristics

Spec					45	10	40
				25.5	45.5	9.5	41.3
DESCRIPTION	GAIN **dB**	dB NOISE FIGURE **dB**	**Total** IN-3rd dBm **OUT**	Carrier Power **dBm**	CUM GAIN **dB**	CUM NF **dB**	OIP3 3rd **dBm**
INPUT			**100**		0.0	0.00	100.0
LEVEL				**-20.0**			
Amplifier	**15**	**6.5**	**40**	-5.0	15.0	6.50	40.0
Mixer	**-9**	**9**	**23**	-14.0	6.0	6.71	22.4
Filter	**-0.5**	**0.5**	**100**	-14.5	5.5	6.74	21.9
Amplifier	**20**	**12**	**22**	5.5	25.5	9.49	22.0
Output					45.5	9.50	41.3
Amplifier	**20**	**5**	**50**	25.5			

Replace Pre-Amplifier with a Fiber Optic Link *

Chain Analysis

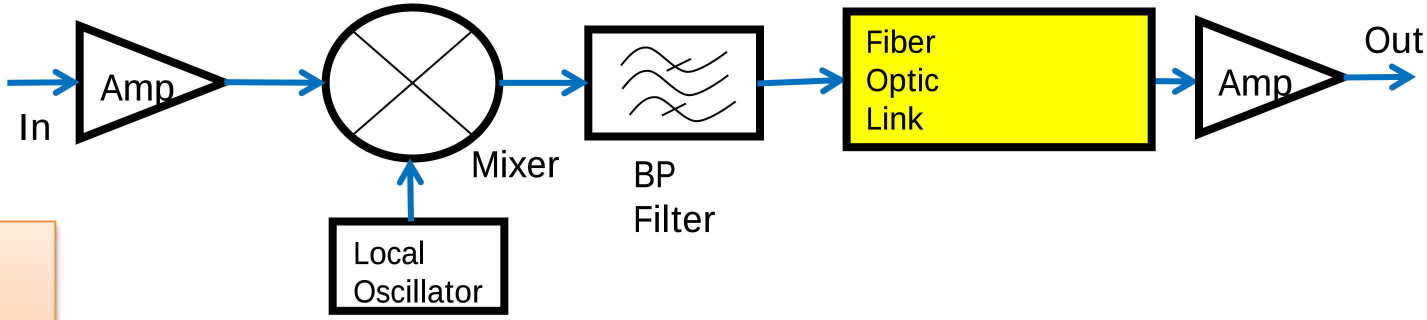

Device Characteristics

DESCRIPTION	GAIN dB	dB NOISE FIGURE dB	Total IN-3rd dBm OUT	Carrier Power dBm	CUM GAIN dB	CUM NF dB	OIP3 3rd dBm
Spec					45	10	40
				28.3	48.3	9.5	42.4
INPUT LEVEL			**100**	-20.0	0.0	0.00	100.0
	0	**0**	**100**	-20.0	0.0	0.00	97.0
Amplifier	**15**	**6.5**	**40**	-5.0	15.0	6.50	40.0
Mixer	**-9**	**9**	**23**	-14.0	6.0	6.71	22.4
Filter	**-0.5**	**0.5**	**100**	-14.5	5.5	6.74	21.9
Fiber Link with Amp	**22.8**	**12.1**	**23.2**	8.3	28.3	9.55	23.2
Output Amplifier	**20**	**5**	**50**	28.3	48.3	9.55	42.4

- Define Gain, Noise figure, Linearity of a fiber optic link
- Characterize the fiber optic link as a microwave component

RF and Microwave Applications using Fiber Optic Links

Coaxial Cable Issues

- High loss
- Loss variations with frequency
- Reflections (VSWR amplitude and phase uncertainties)
- Signal interference
- Bulk weight

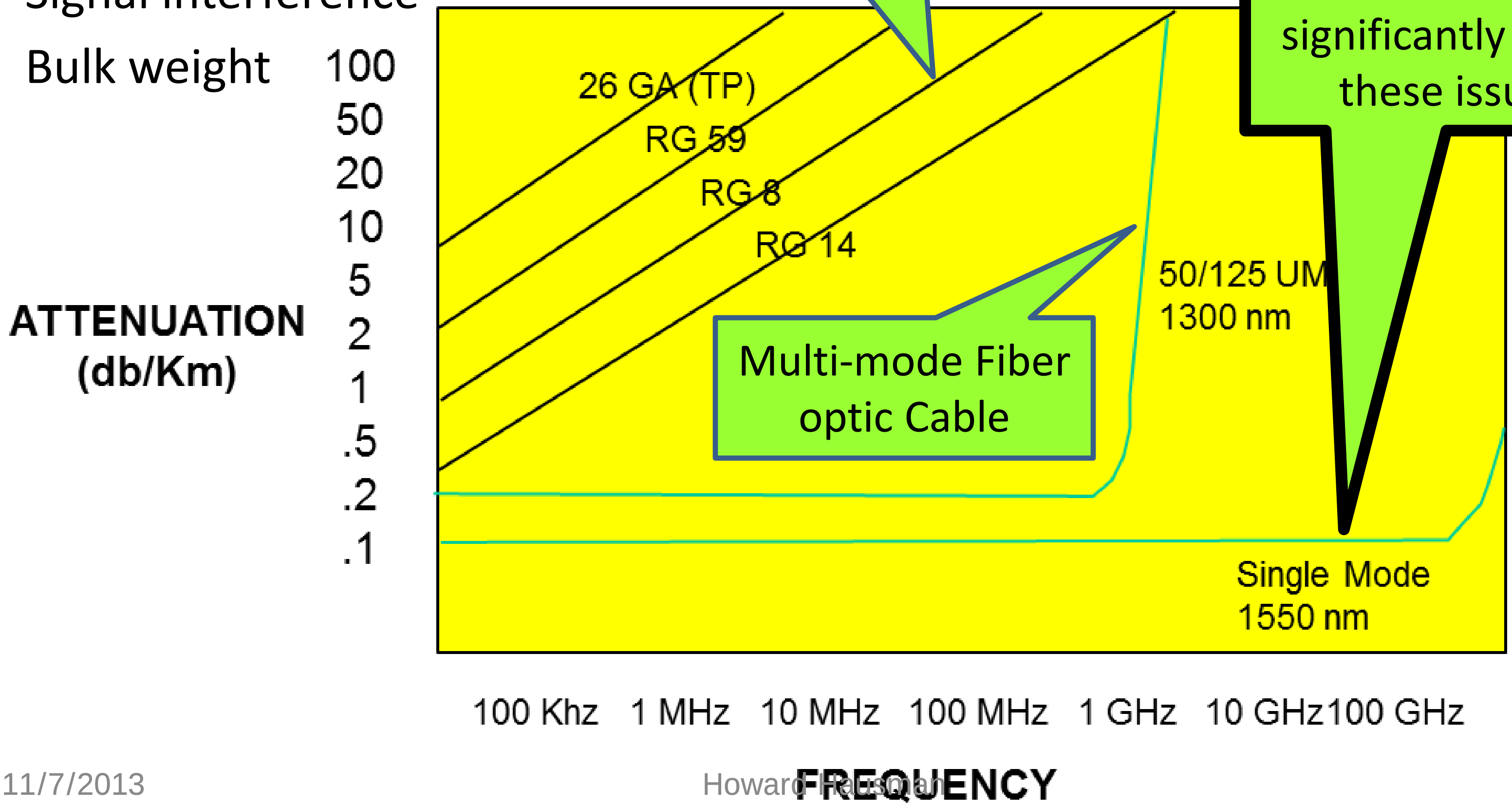

Coaxial cables have significant loss increasing as frequency increases

Single Mode Fiber used with a DFB laser significantly improves these issues *

Multi-mode Fiber optic Cable

Low Noise Amplifiers (LNA's) with a Fiber Optic Link

- Low Noise amplifiers are traditionally mounted as close to the antenna as possible
- Output could be a long distance from the rest of the system
- Transporting signal over wave guide is bulky and costly
- Coaxial cable is usually acceptable over short distances
- Alternate solution is to use a fiber optic link -

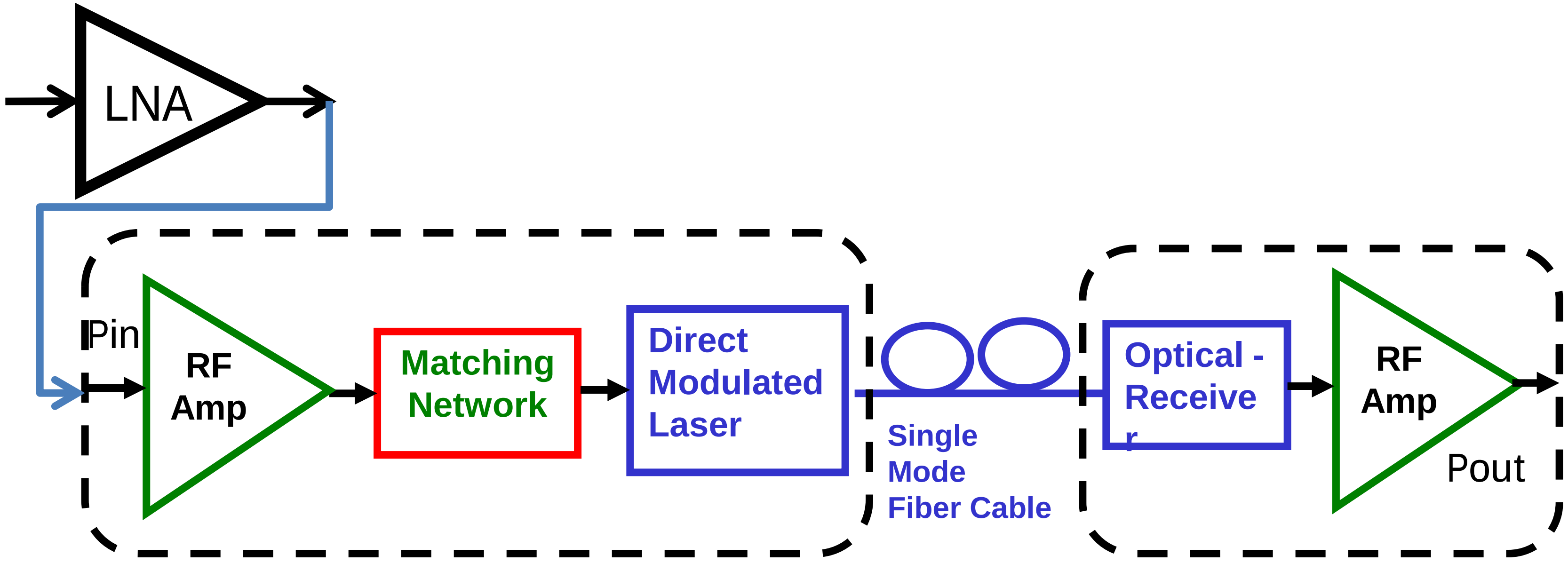

LNA with Optical Link Output

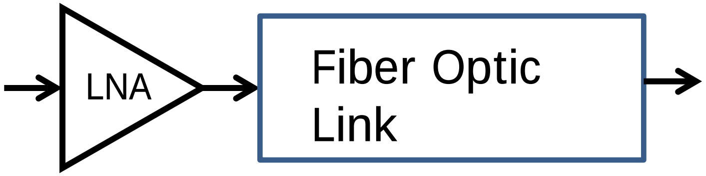

		40 dB Gain LNA			
LNA & Fiber Link	Fiber Length kM	GAIN **dB**	NF **dB**	OIP3 **dBm**	Noise Temp **Degrees K**
LNA		40	1	25	75.09
LNA & Fiber Link	1	62.79	1.005253	23.14186	75.53
LNA & Fiber Link	20	57.09	1.007527	20.26475	75.72

- 40 dB Gain LNA with 1 dB NF
- Noise Degradation
  - at 1.0 kM; ≈ 0.0052 dB (0.44^{0}K)
  - at 20 kM; ≈ 0.0075 dB (0.63 ^{0}K)
  - Output IP3
- OIP3 degrades ≈ 2.9 dB from 1.0 kM to 20kM   *

Instrument Measurements over Long Distances

- ➢ Difficulty measuring systems with input and outputs spatially separated over long distances
- ➢ Using a fiber optic links can extend the reach of the instrument
- ➢ Connect a link to the input & output ports
- ➢ Calibrate the system with the fiber link
- ➢ Standard test equipment can make the instrumentation usable over very long distances.

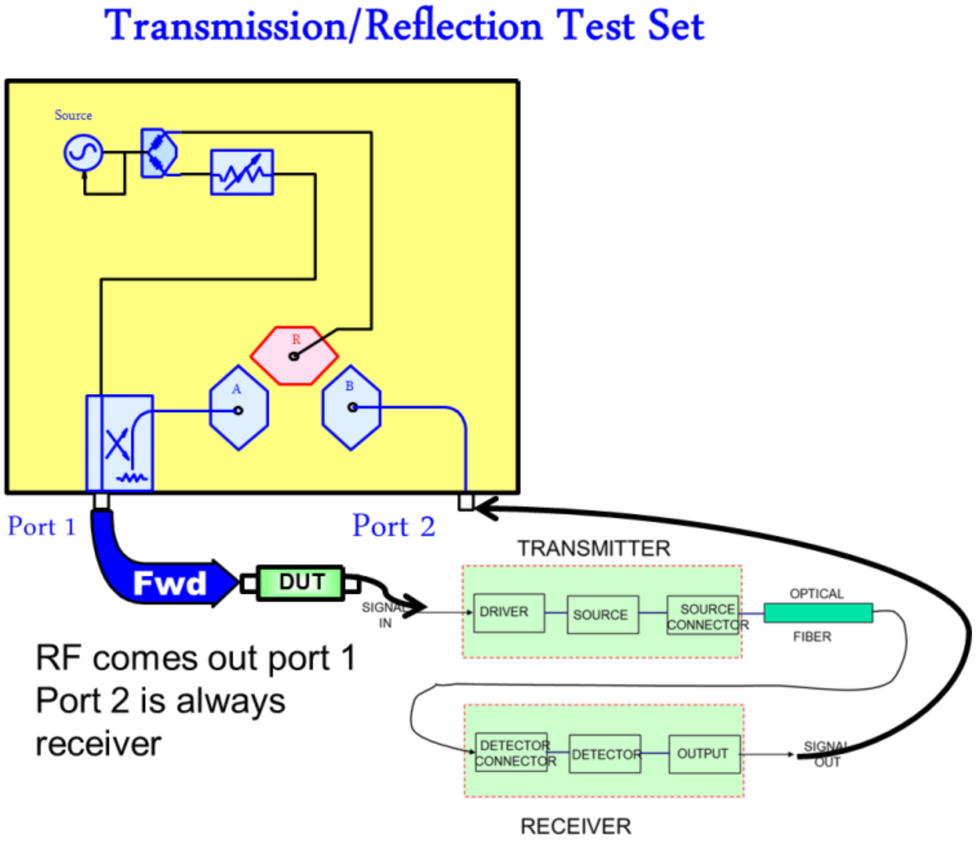

Transmission/Reflection Test Set

RF comes out port 1
Port 2 is always receiver

- ➢ Gain and phase transfer characteristics have been successfully measured over hundreds of meters

Application of Fiber Optic Links in Satellite Communications Earth Stations

- Frequency converters with L-Band IF mounted on the antenna
- Modems located away from the Antenna
- Coaxial cable
  - High Loss
  - Slope over Frequency

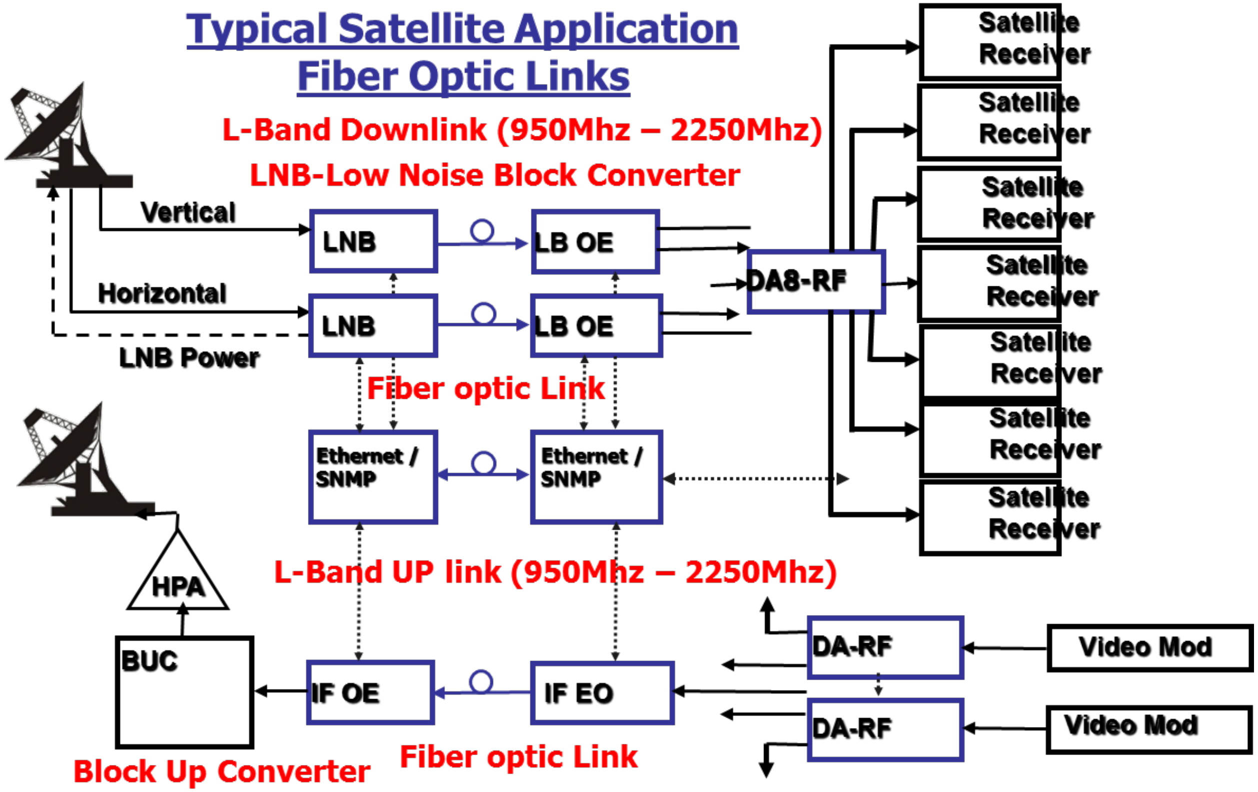

- As the distance gets longer, e.g. 20 to 30 meters the insertion loss and frequency response slope becomes unacceptable
- A fiber optic link alleviates these problems
- System can be factory adjusted *

Long Delay Lines

- Long delay lines require
- Low loss
- Wide bandwidth
- Small size
- Fiber optic cables make fiber optic links realizable solution
- Small single mode fiber can be coiled into small spoils,
- Smaller and lighter than equivalent coaxial cables *

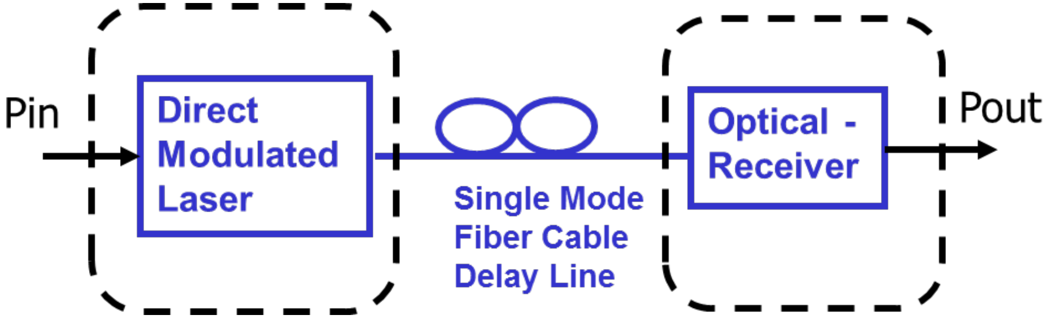

Pin

Direct Modulated Laser

Single Mode Fiber Cable Delay Line

Optical - Receiver

Pout

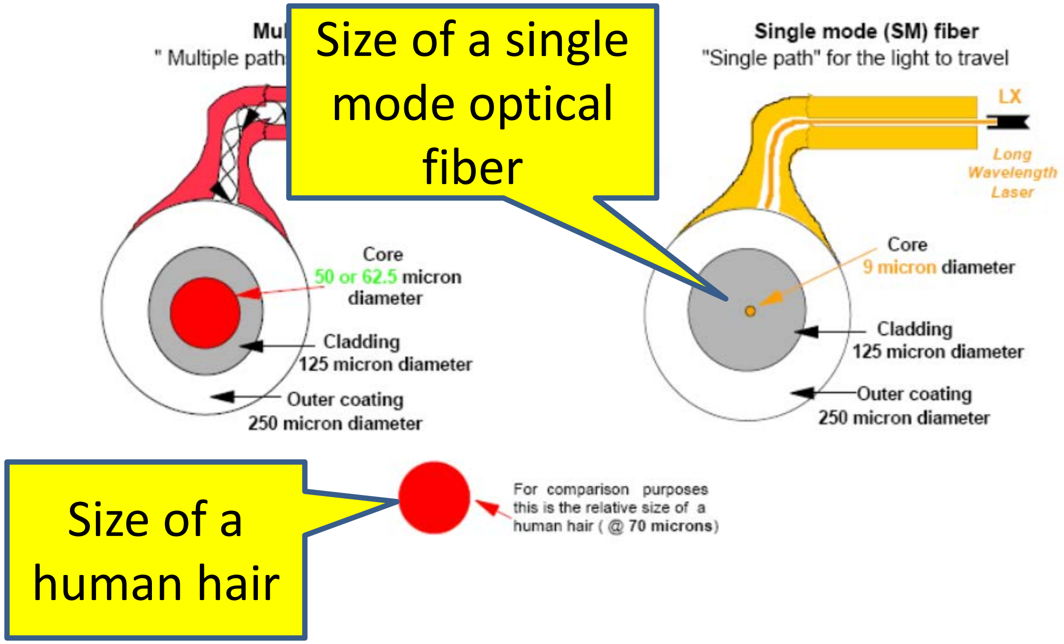

Size of a single mode optical fiber

Size of a human hair

Data of a 1GHz to 18GHz Fiber Optic Link

Input Impedance (S11 & S22)

VSWR Spec: 2:1 max *

S11

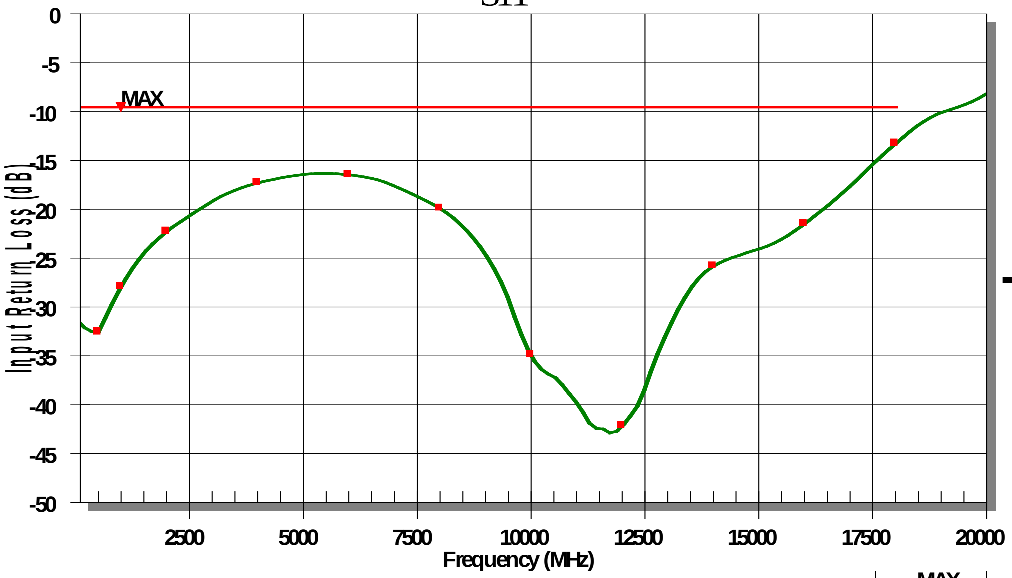

Amp → Fiber Optic Link → Amp

S22

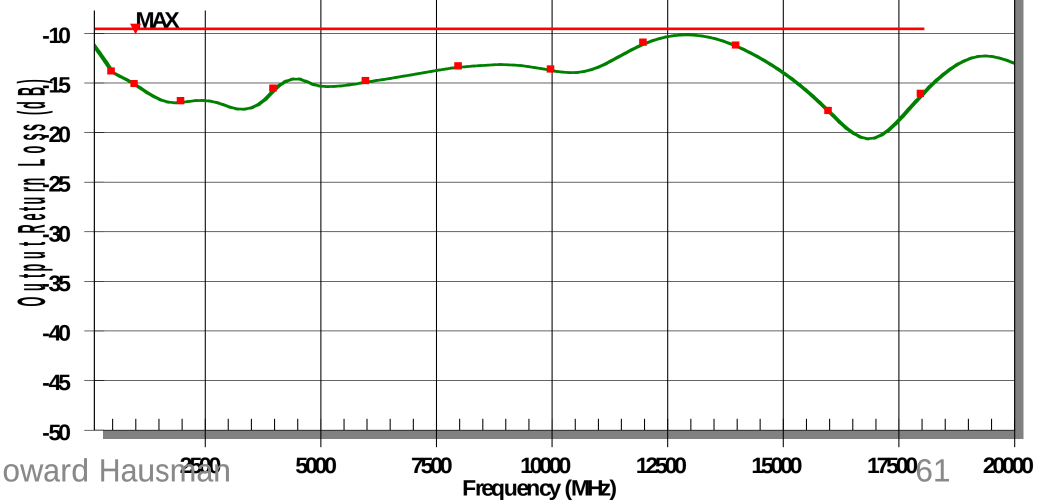

Data of a 1GHz to 18GHz Fiber Optic Link Gain (S21)

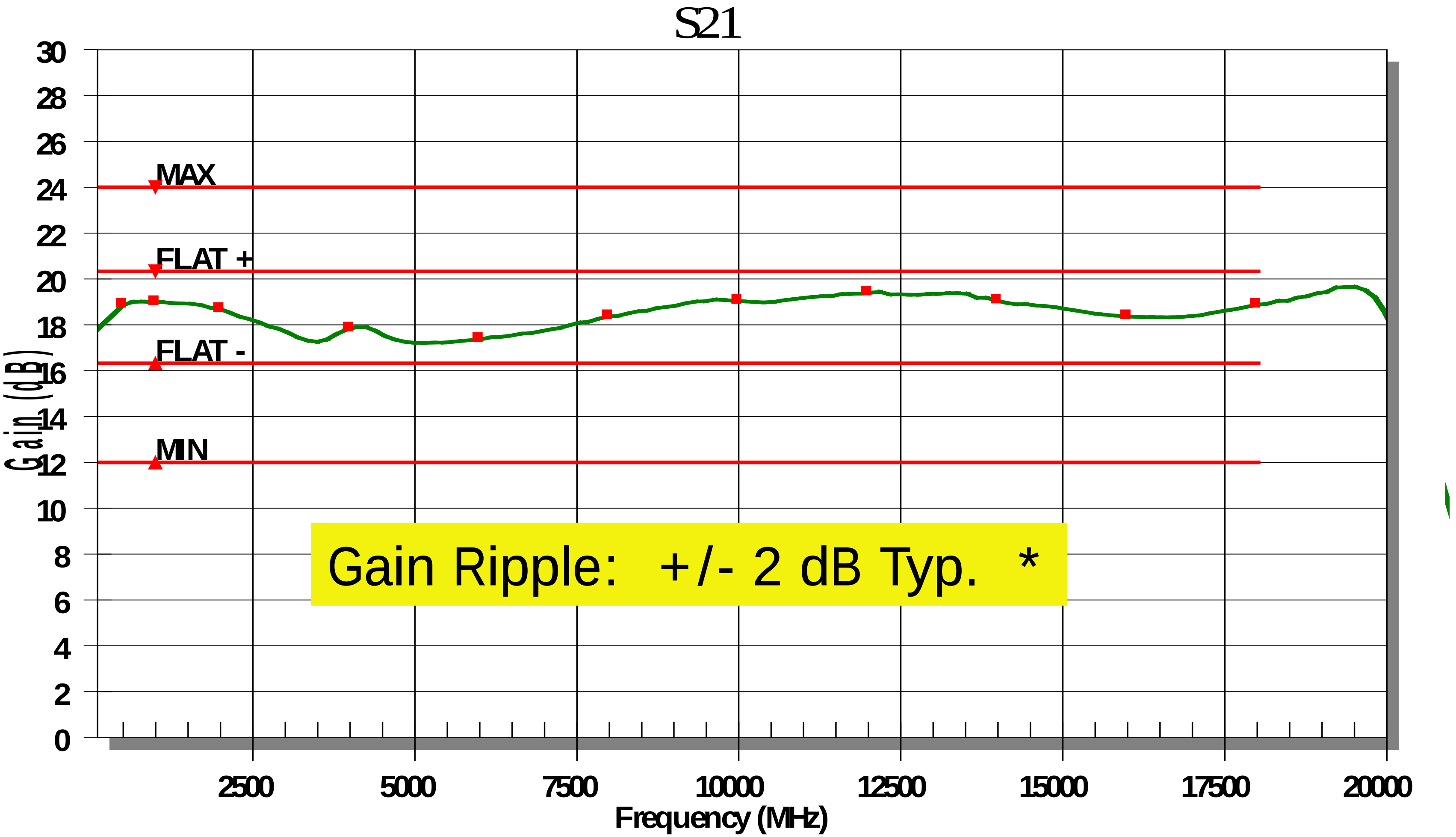

Gain Ripple: +/- 2 dB Typ. *

Data of a 1GHz to 18GHz Fiber Optic Group Delay (GD21)

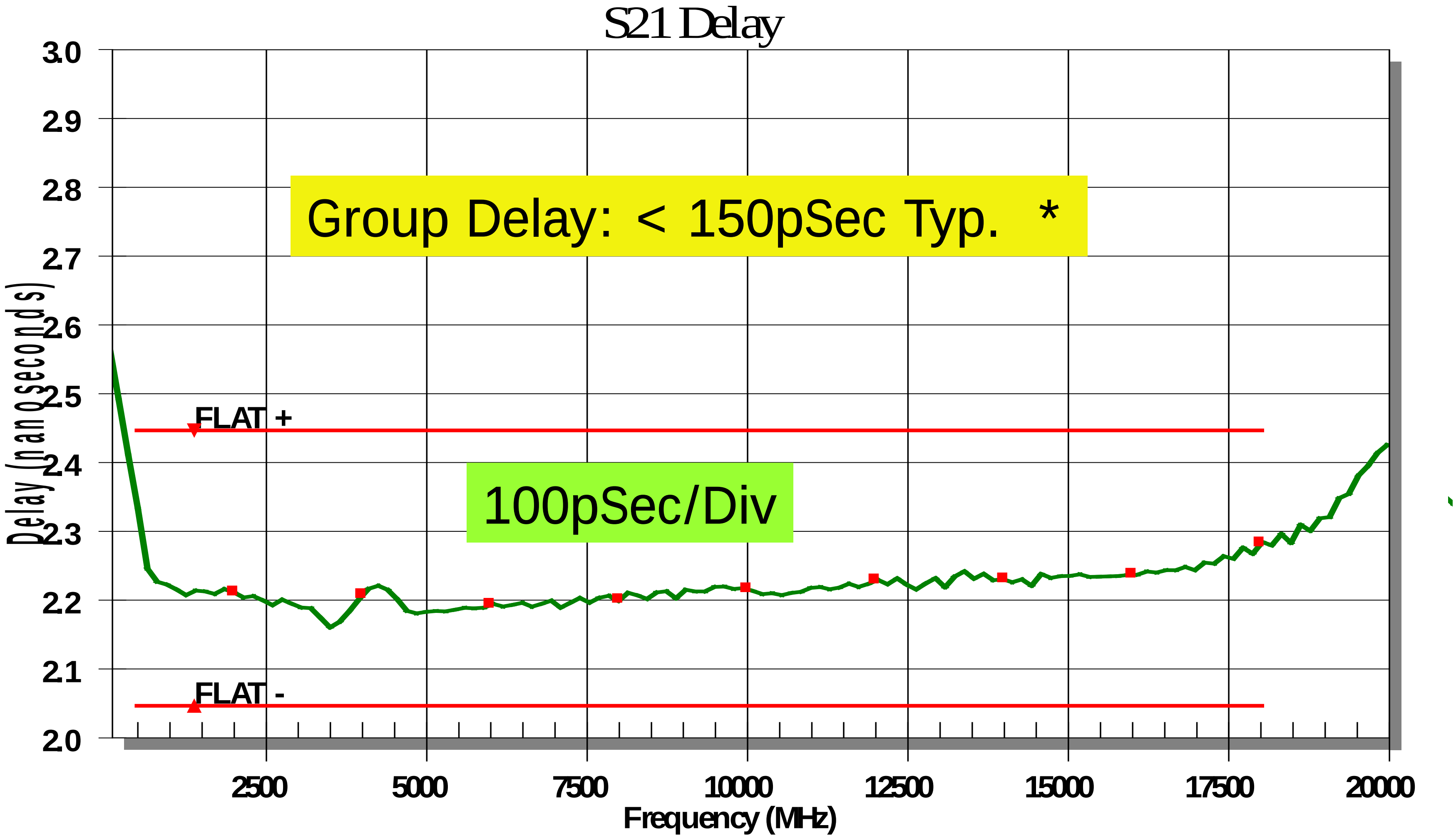

Group Delay: < 150pSec Typ. *

100pSec/Div

Data of a 1GHz to 18GHz Fiber Optic Link Input Power 1 dB Compression Point

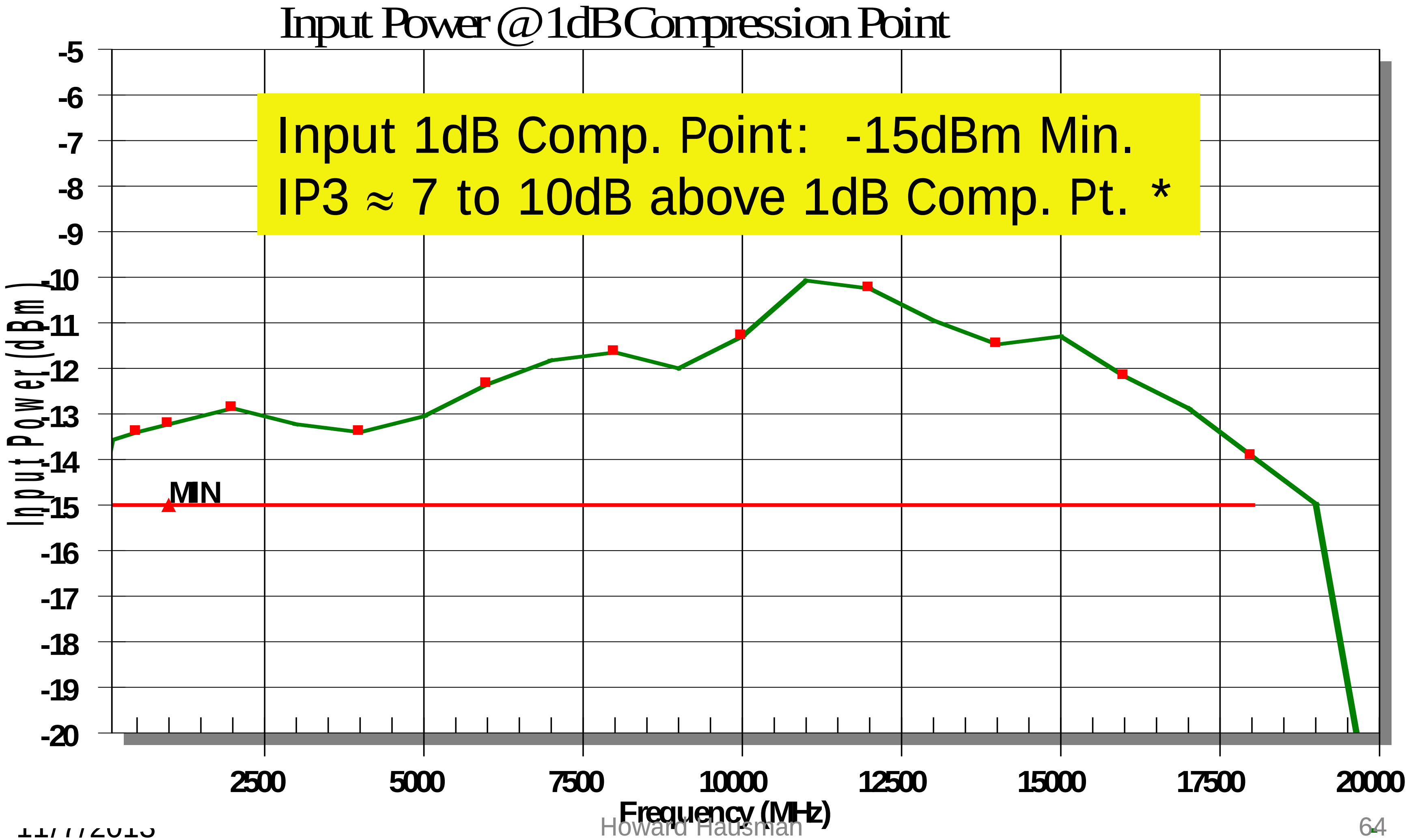

Input 1dB Comp. Point: -15dBm Min.
IP3 ≈ 7 to 10dB above 1dB Comp. Pt. *

Data of a 1GHz to 18GHz Fiber Optic Link Noise Figure

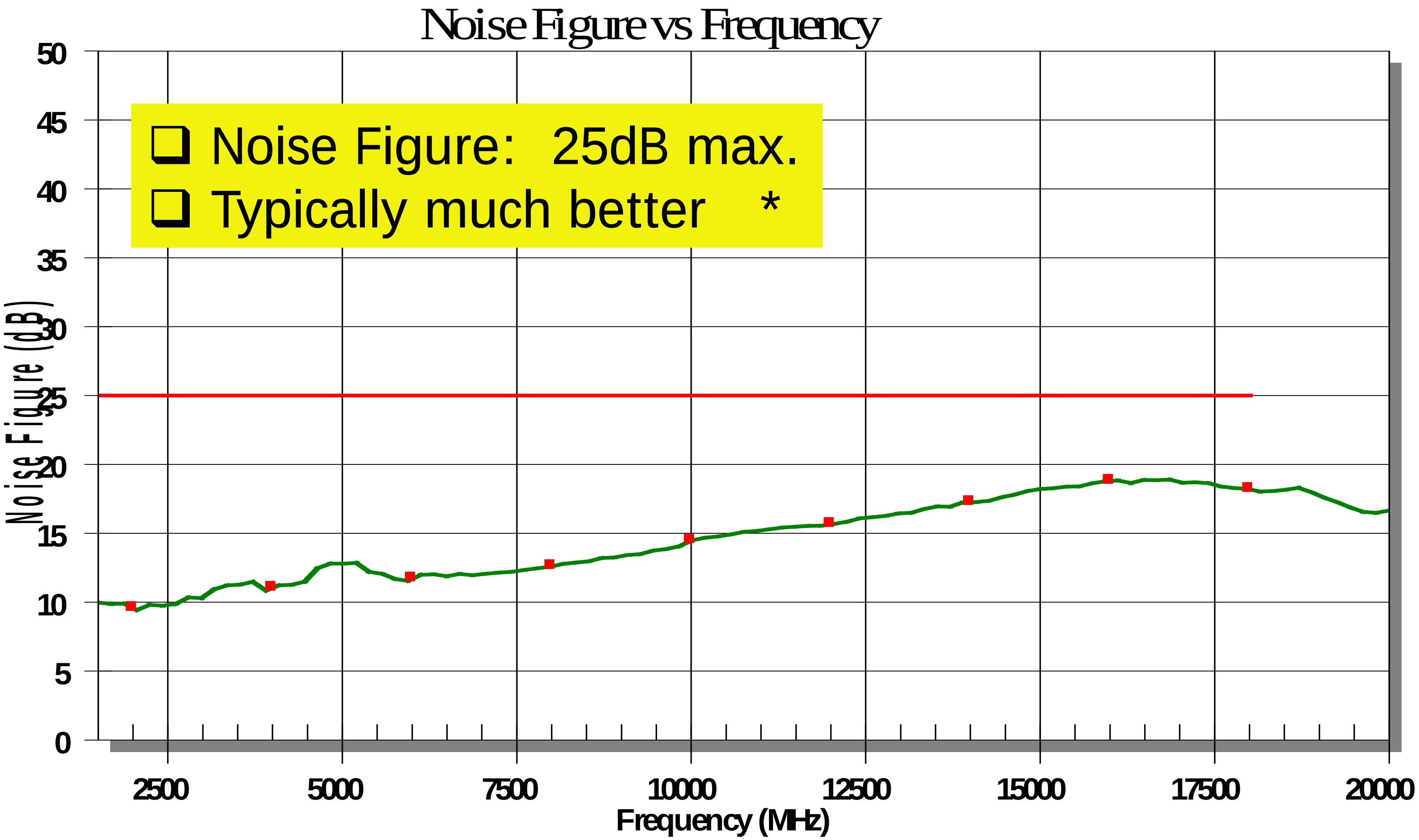

- Noise Figure: 25dB max.
- Typically much better *

Conclusion

- Fiber optic links are useful tools
- Solves problems that can be otherwise
  - Very costly
  - Sometimes unresolvable with other techniques
- Understand the technology
- Fiber optic links are not ideal devices
- As with any tool, choose the right one for your application
  *